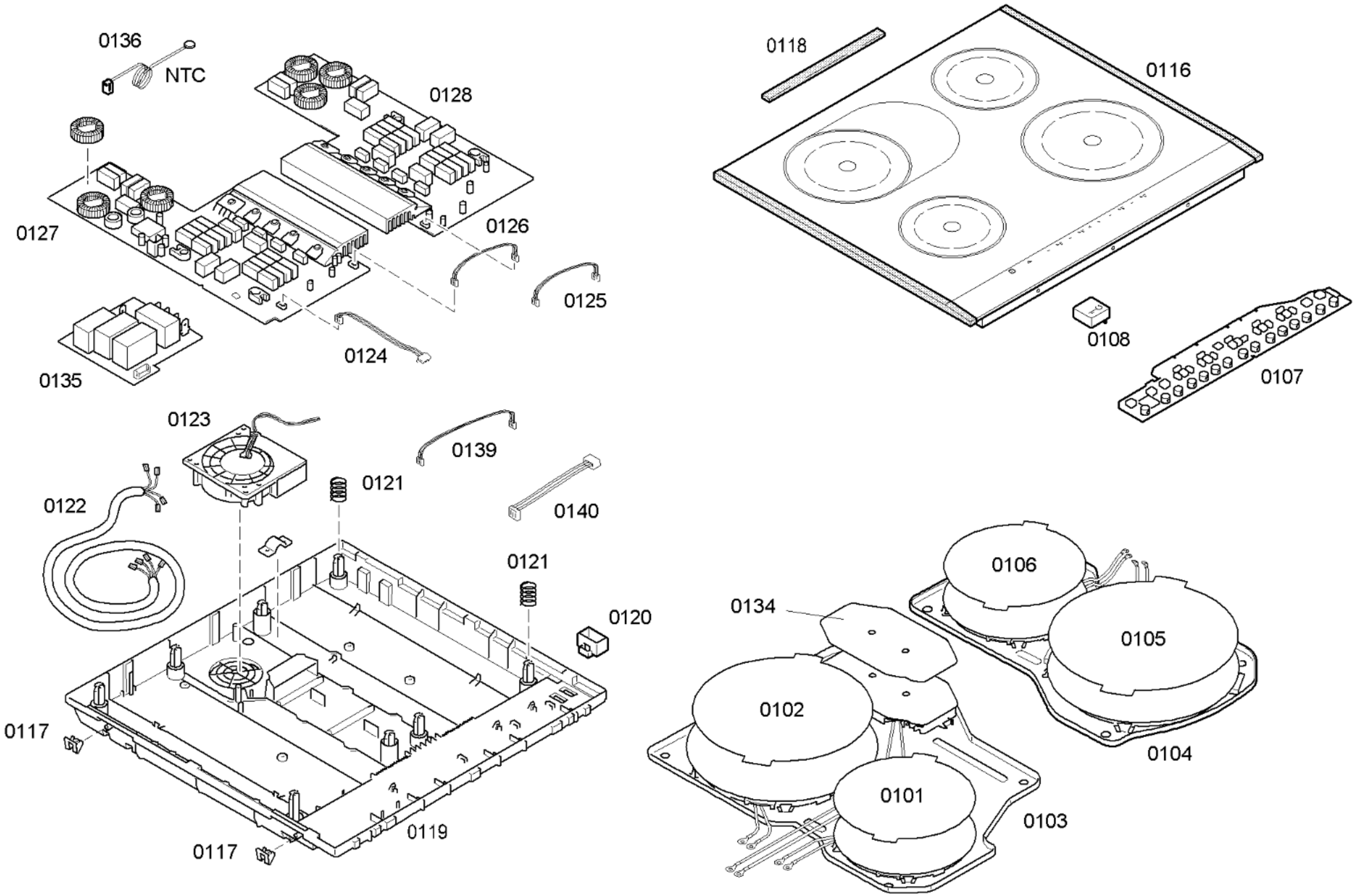


58300000114907 aet 000 b 1/1