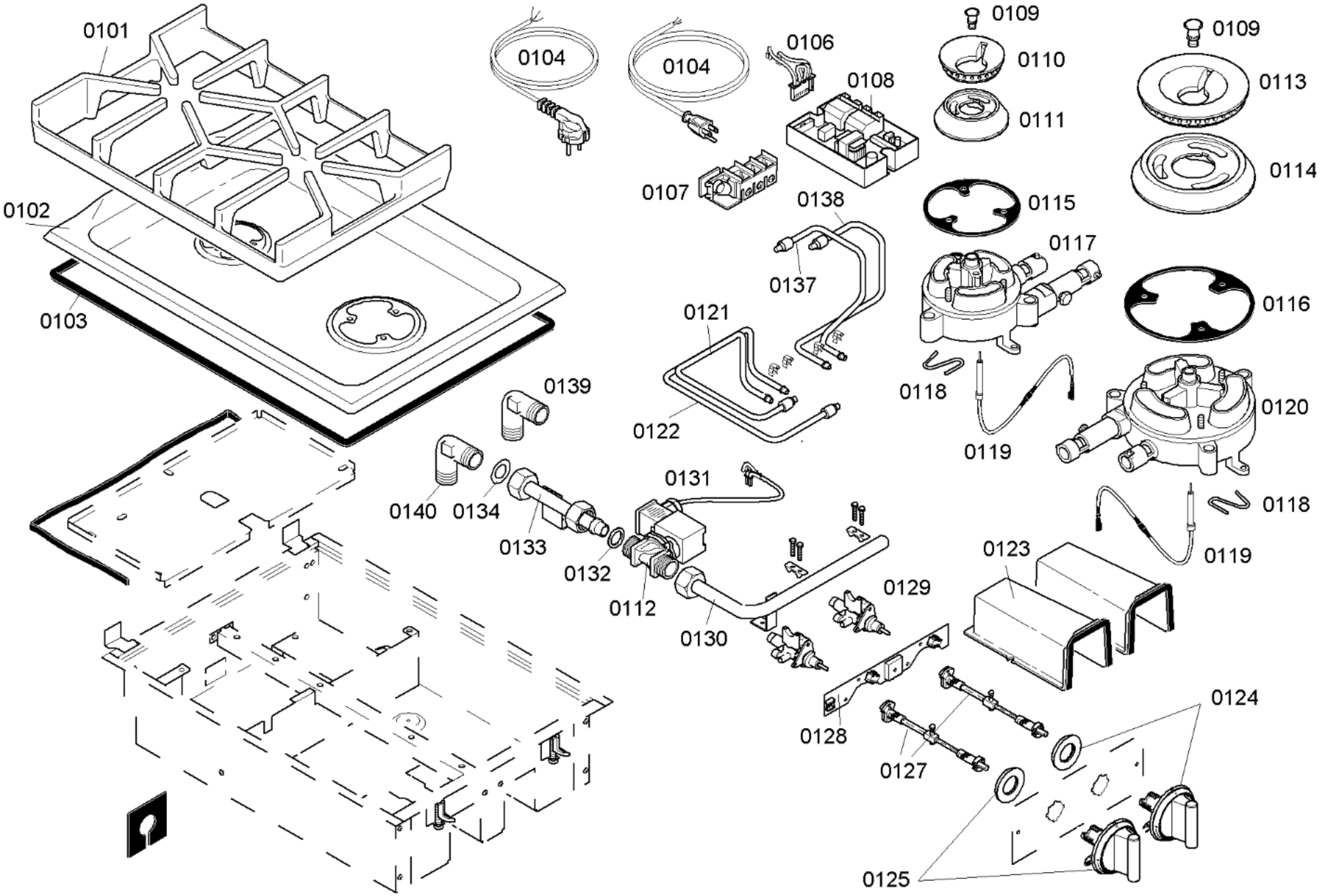

0199

0196

58300000108105 aet 000 d 1/1