0199

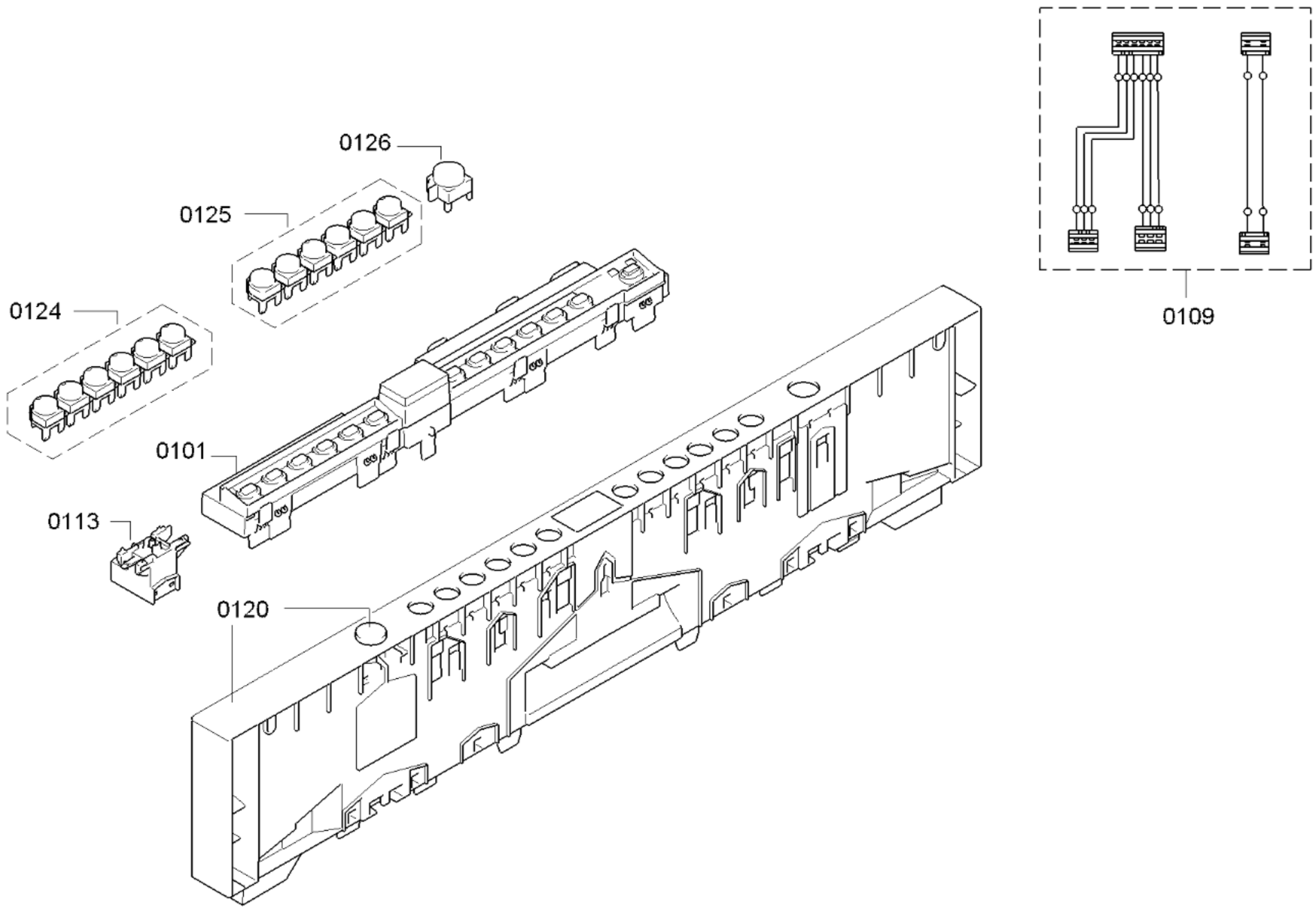

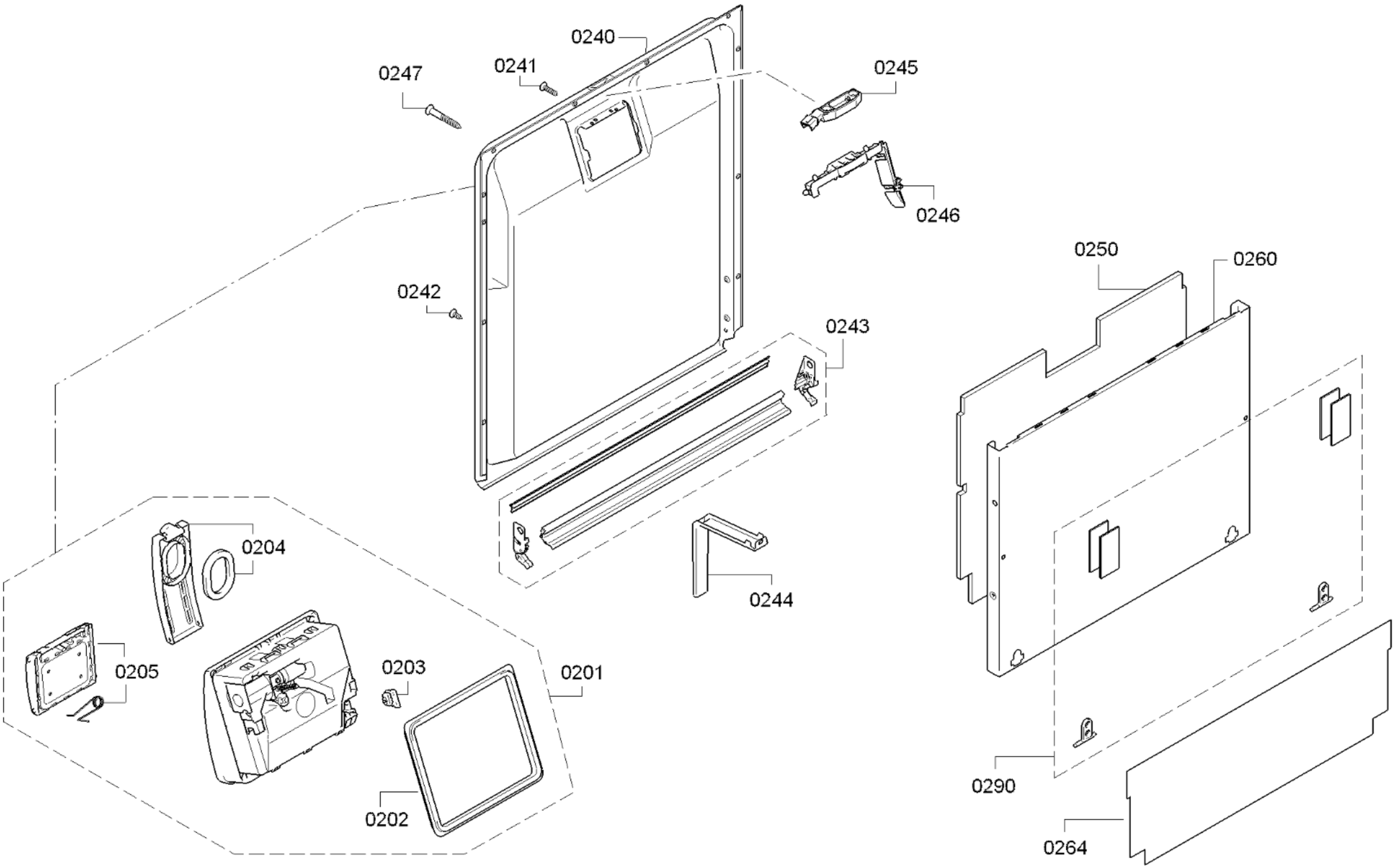

58300000177847 aet 000 a 2/6

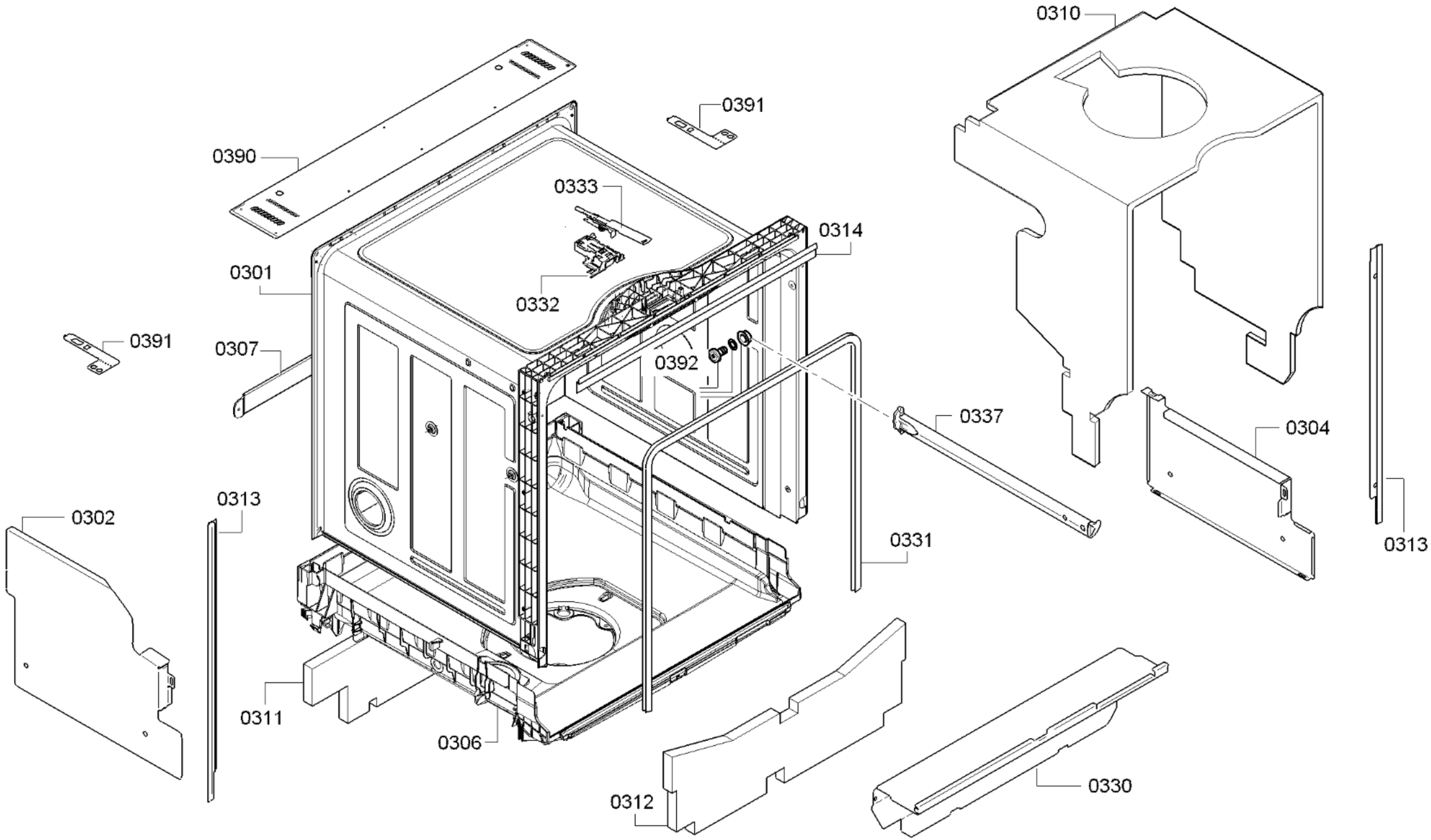

58300000177847 aet 000 a 3/6

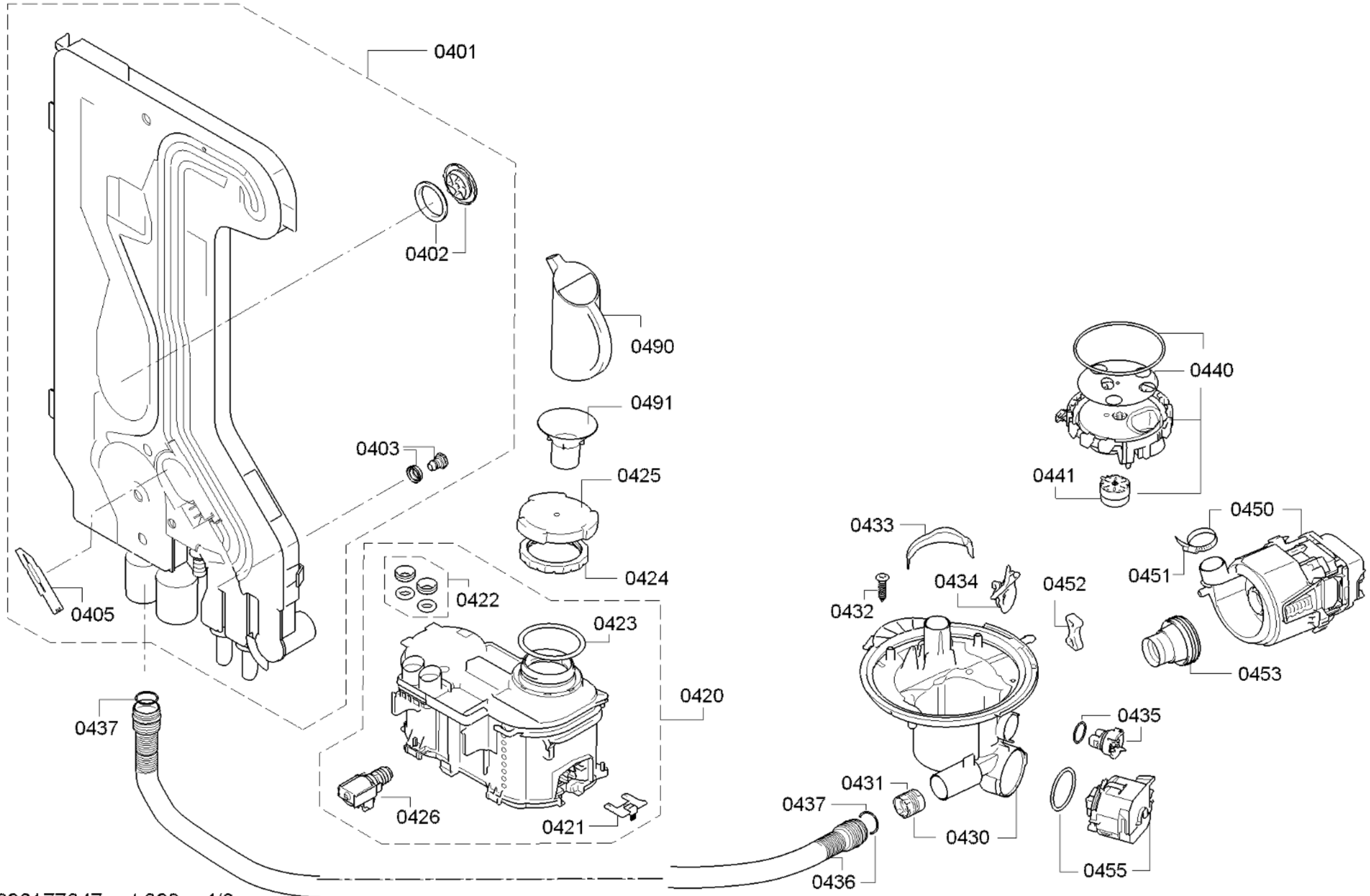

58300000177847 aet 000 a 4/6

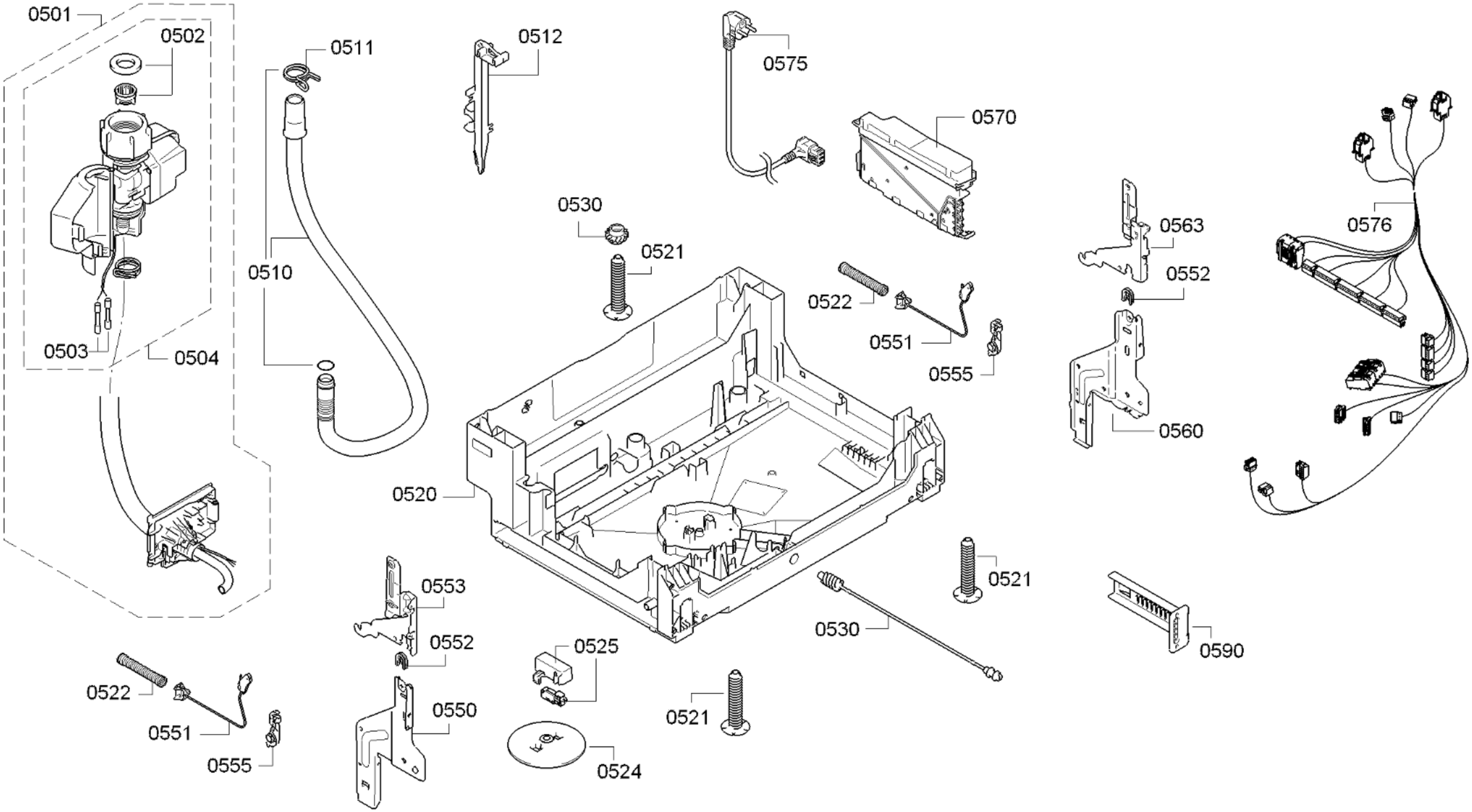

58300000177847 aet 000 a 5/6

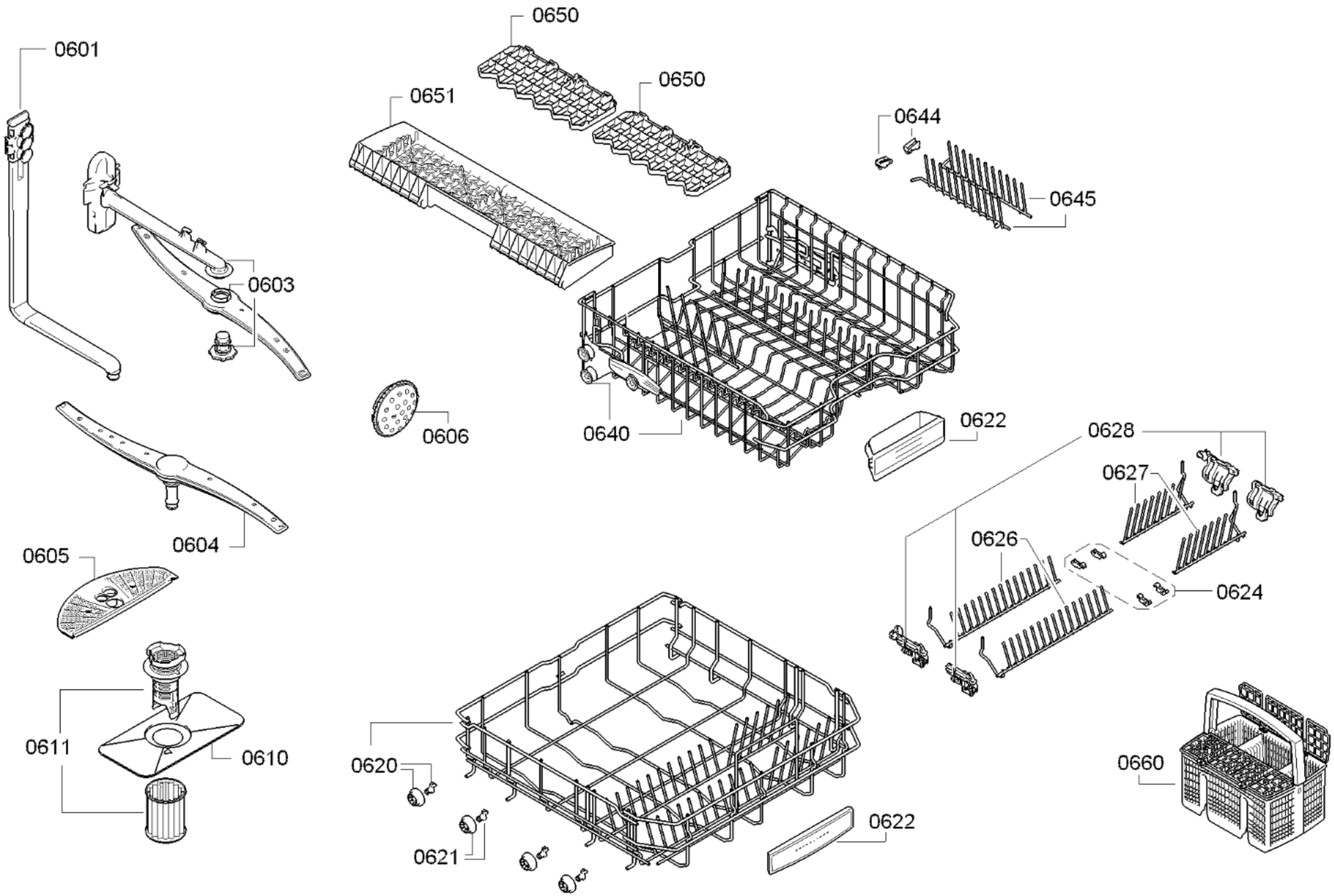

58300000177847 aet 000 a 6/6