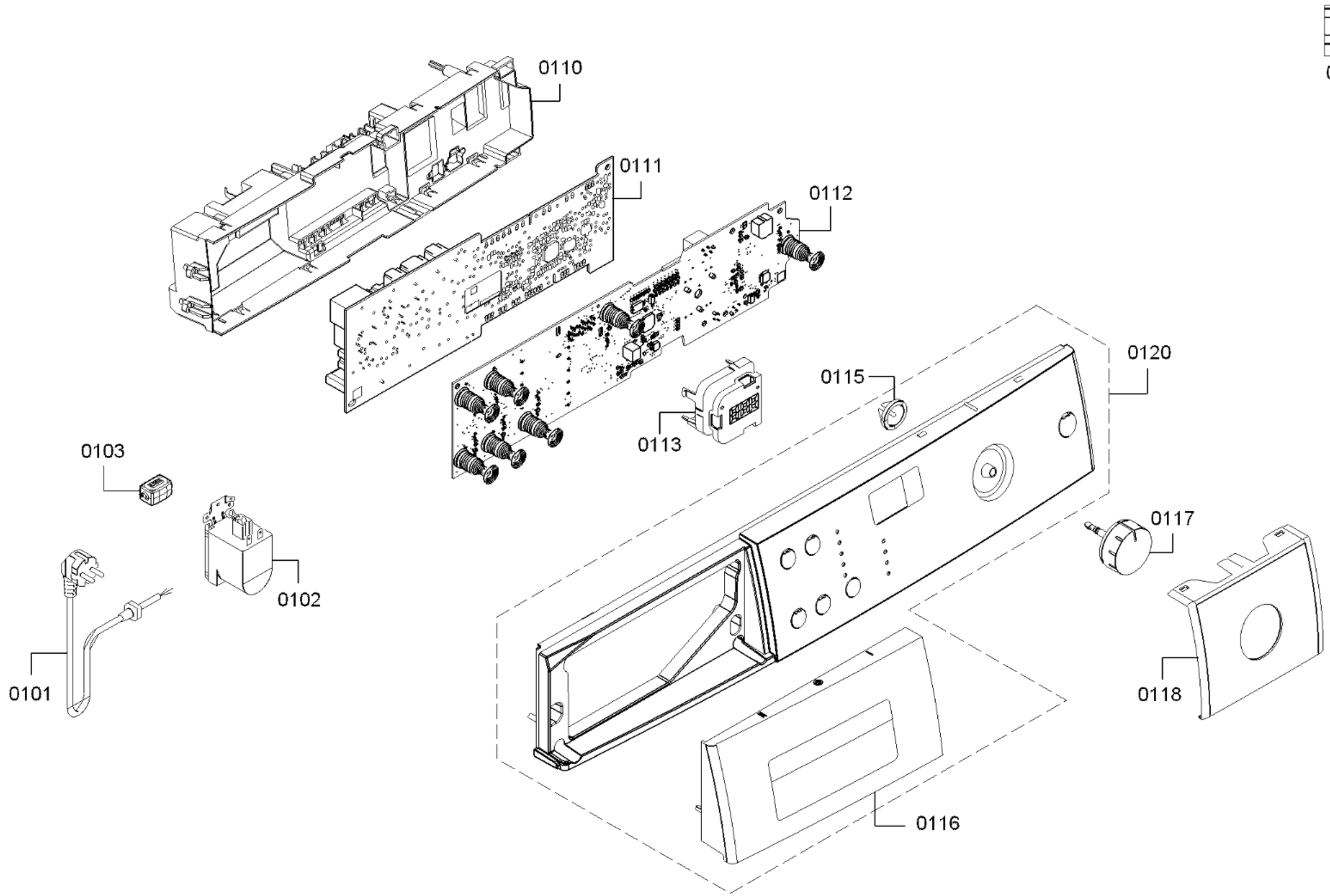

58300000186382 aet 001 a

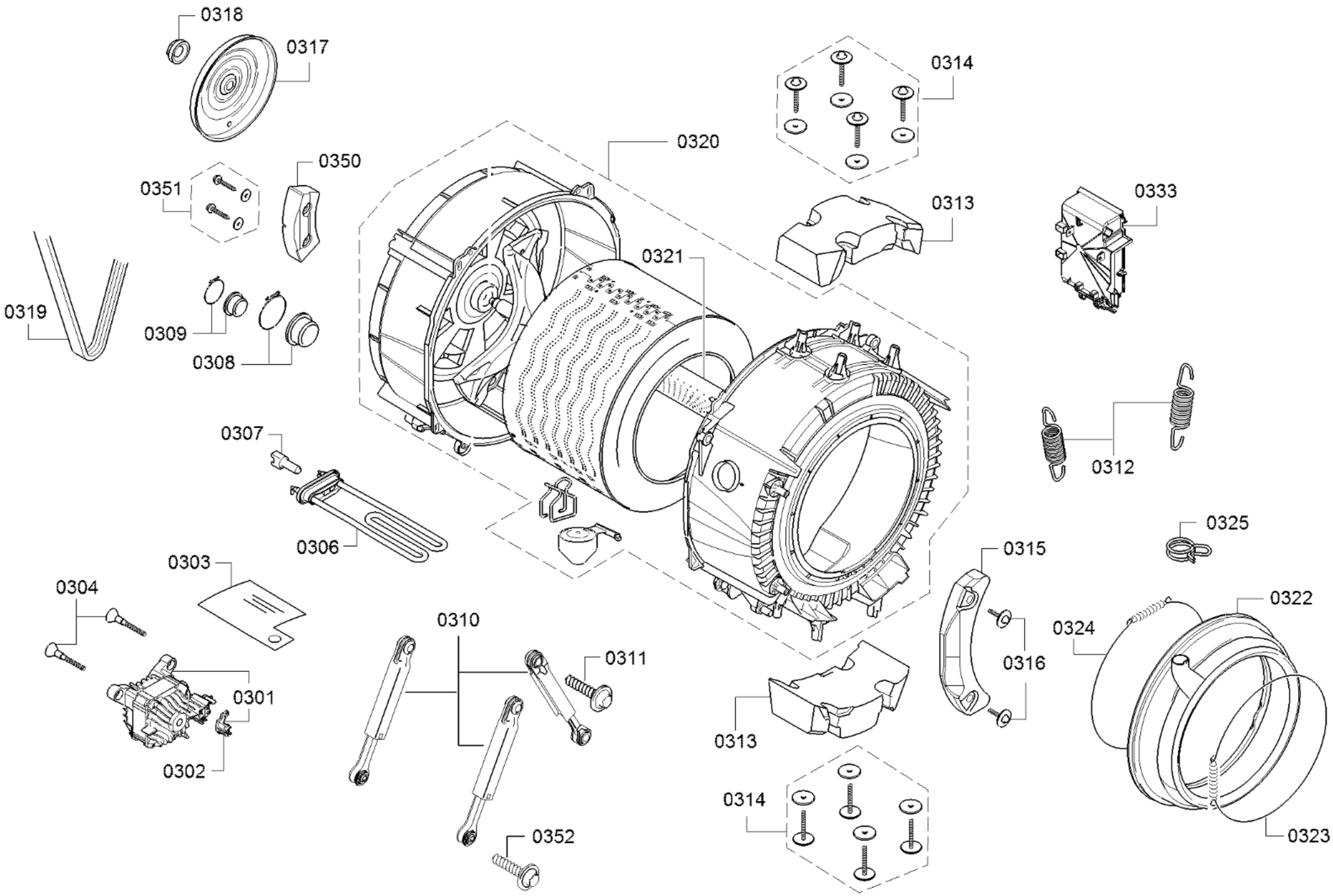

58300000186391 aet 003 b

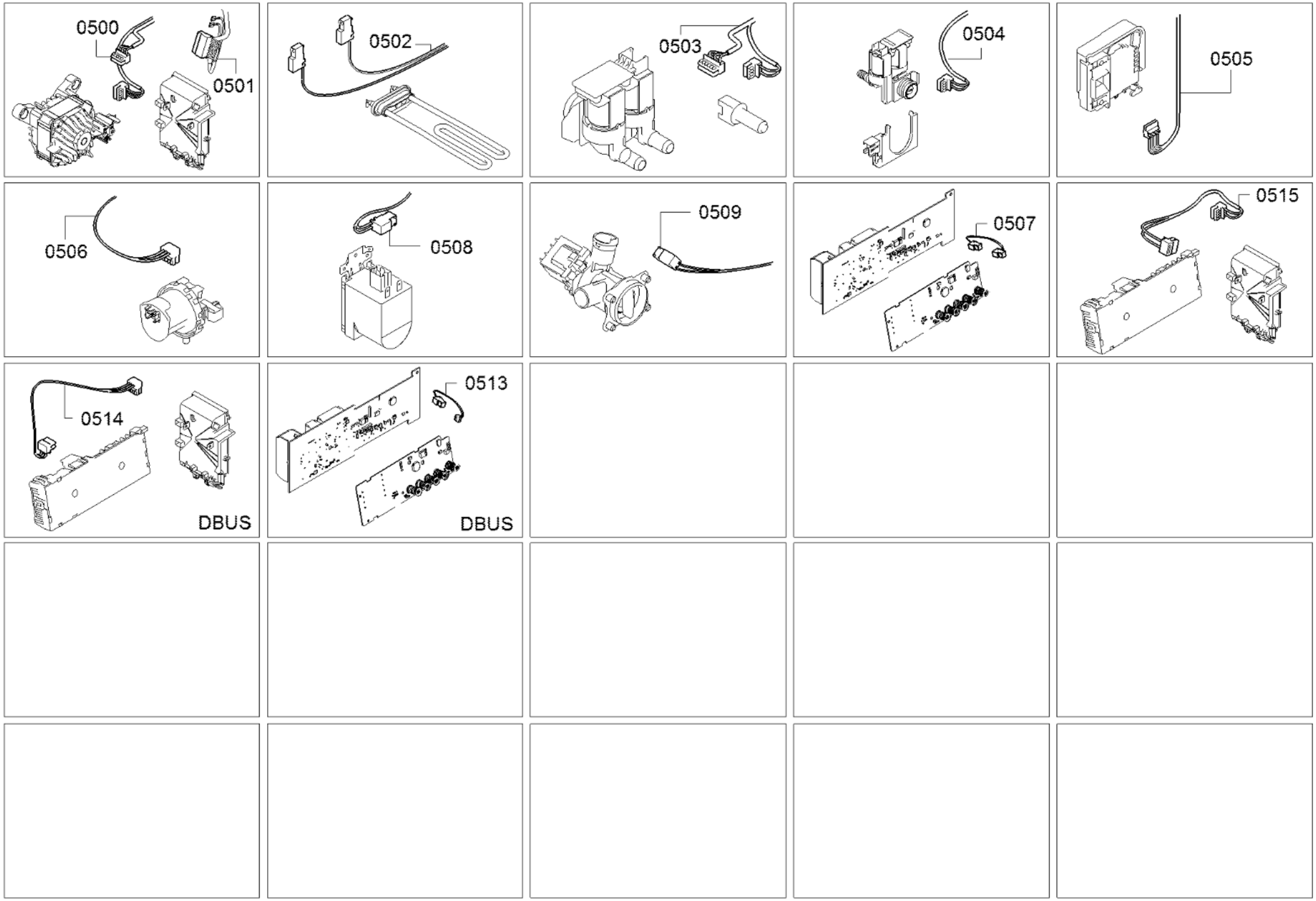

58300000186399 aet 005 b

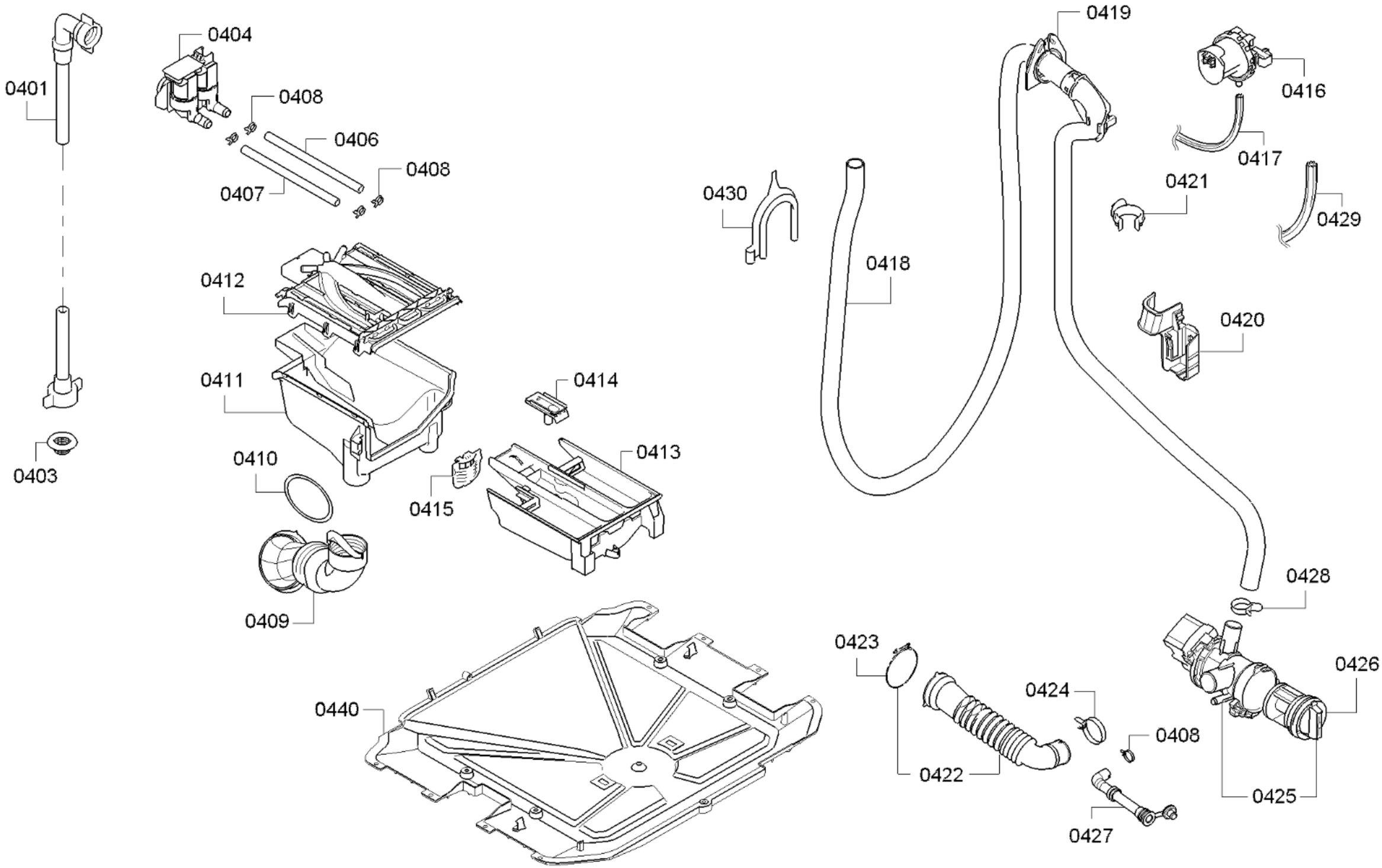

58300000186393 aet 004 a

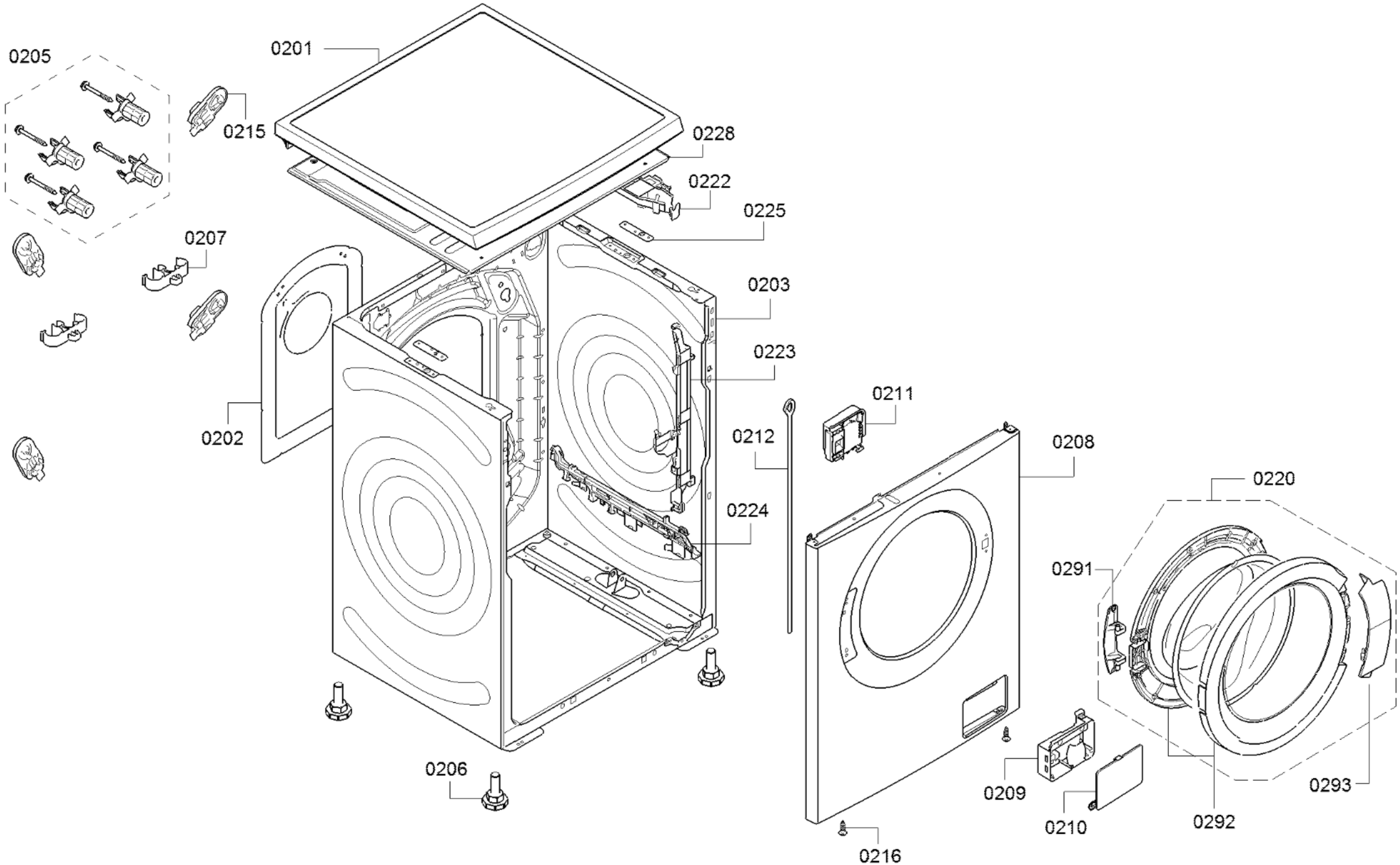

58300000186389 aet 002 c