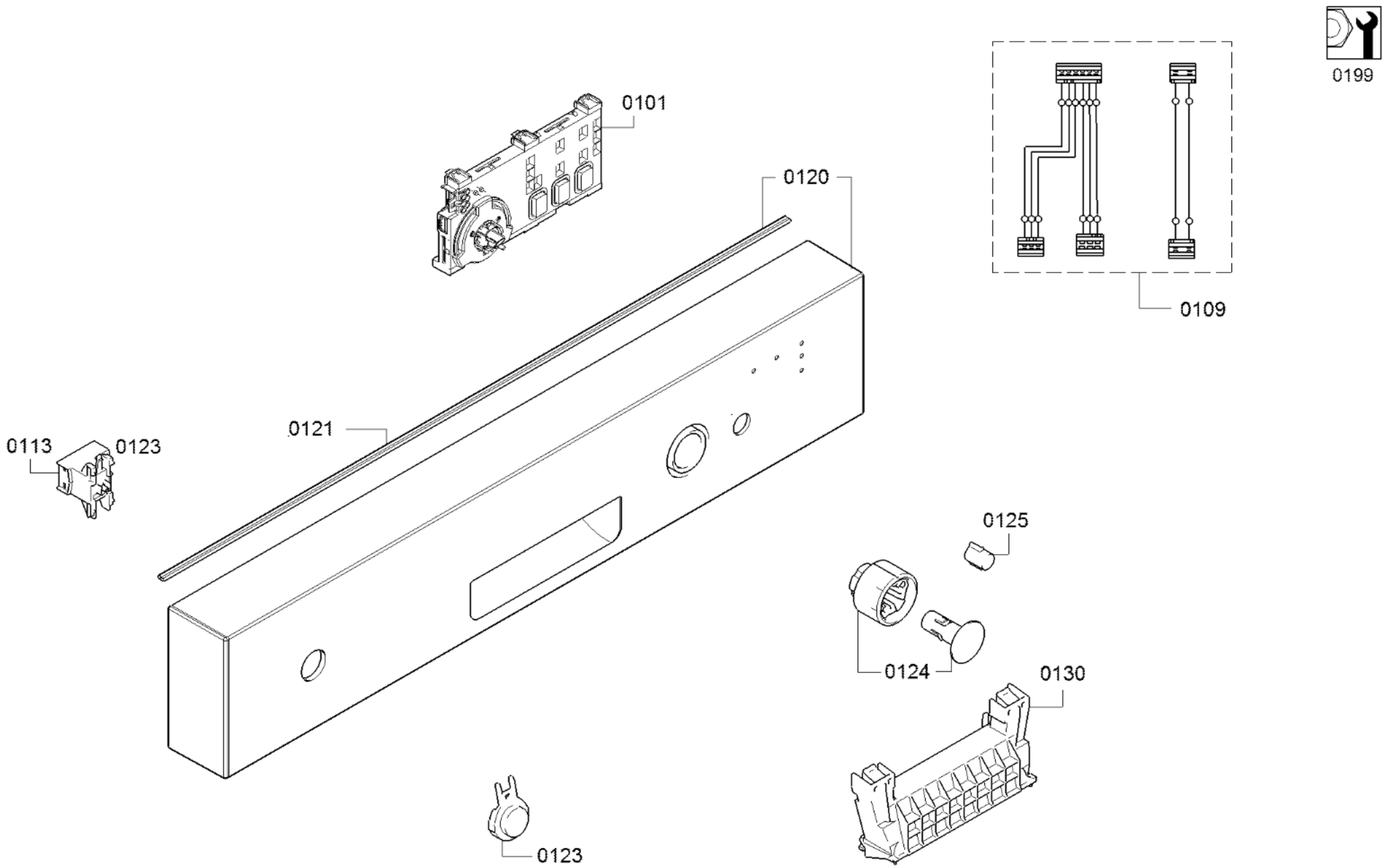
0199
0101
0120
0109
0121
0113
0123
0125
0124
0130
0123

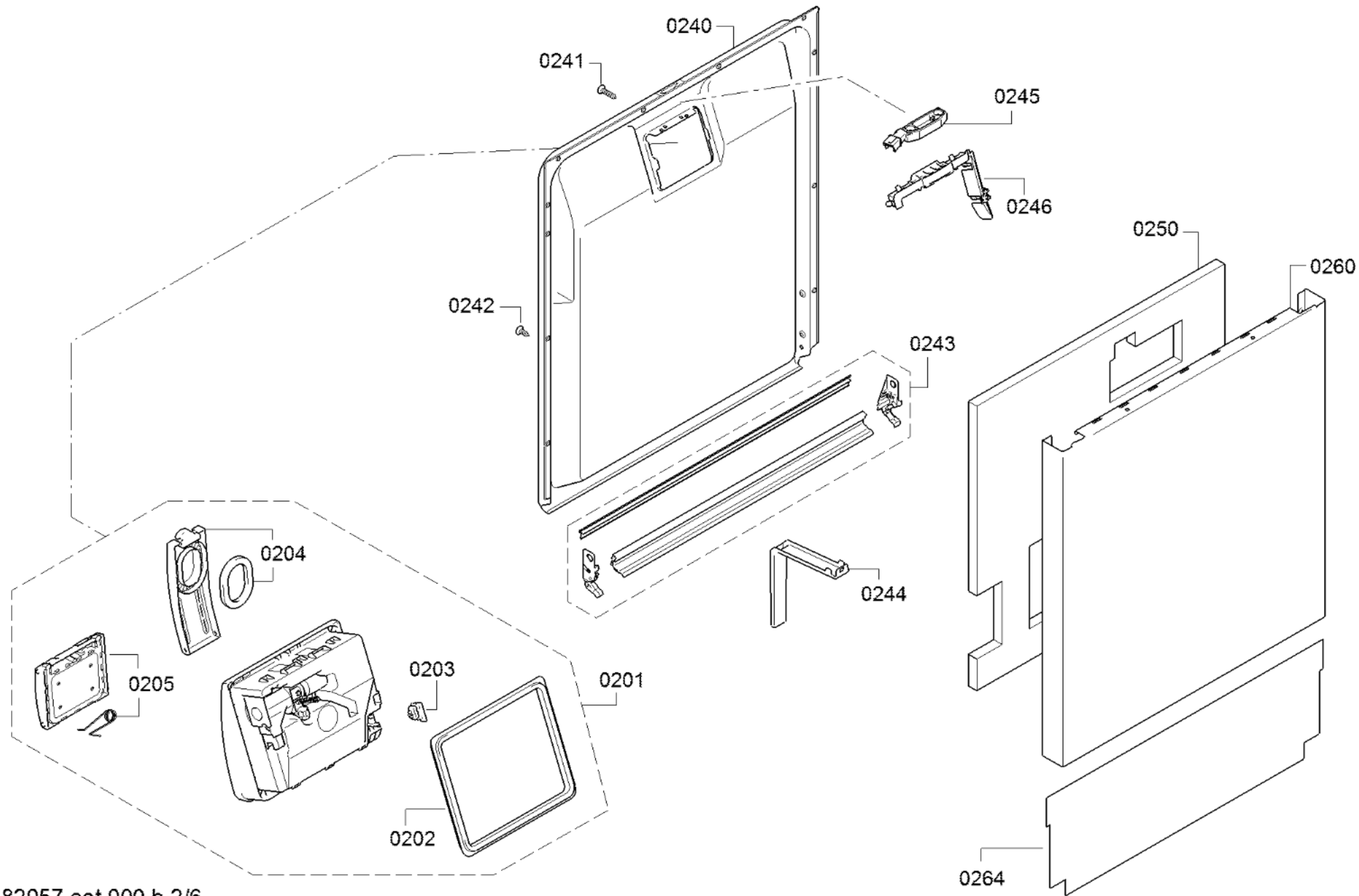

58300000182057 aet 000 b 2/6

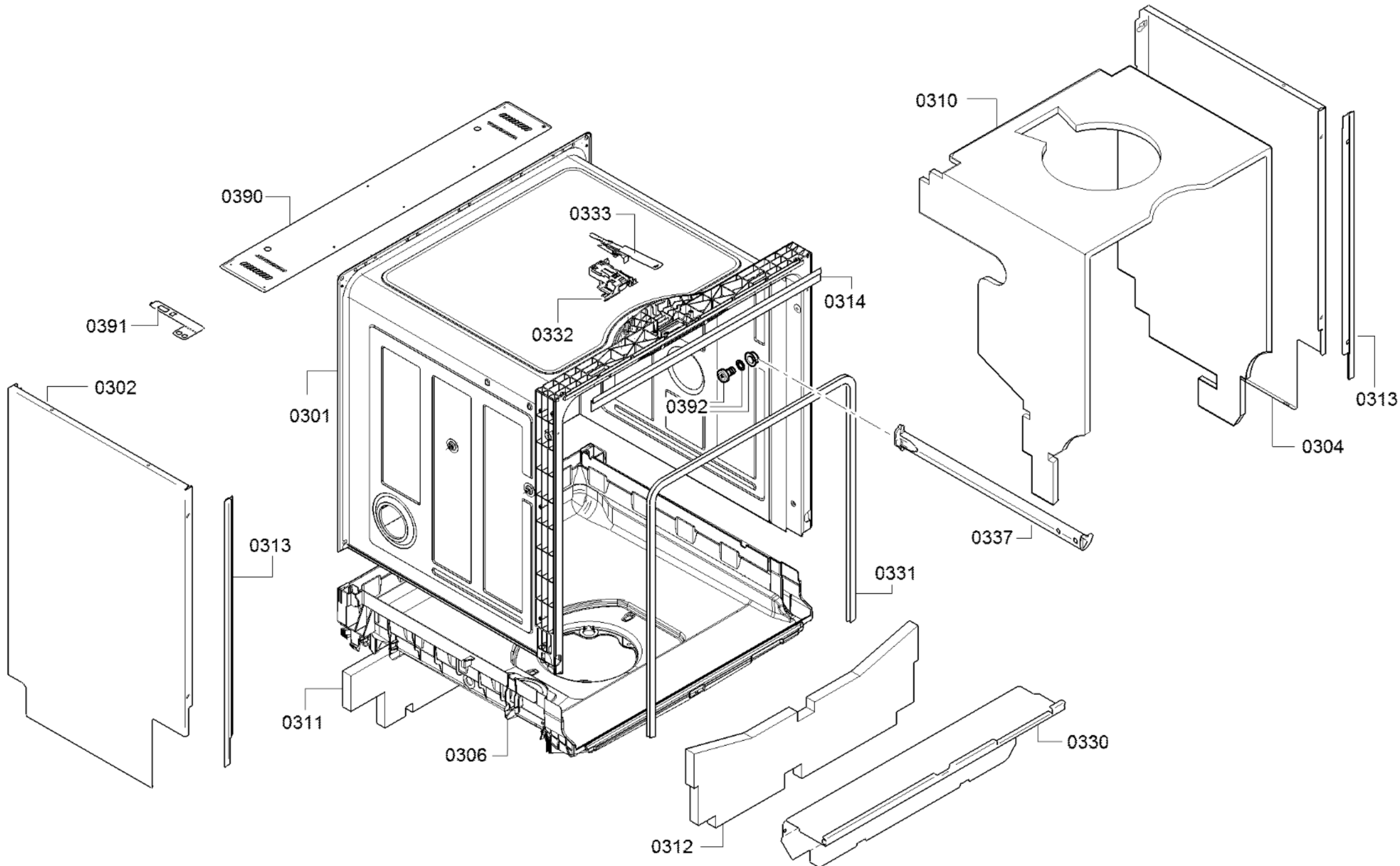

58300000182057 aet 000 b 3/6

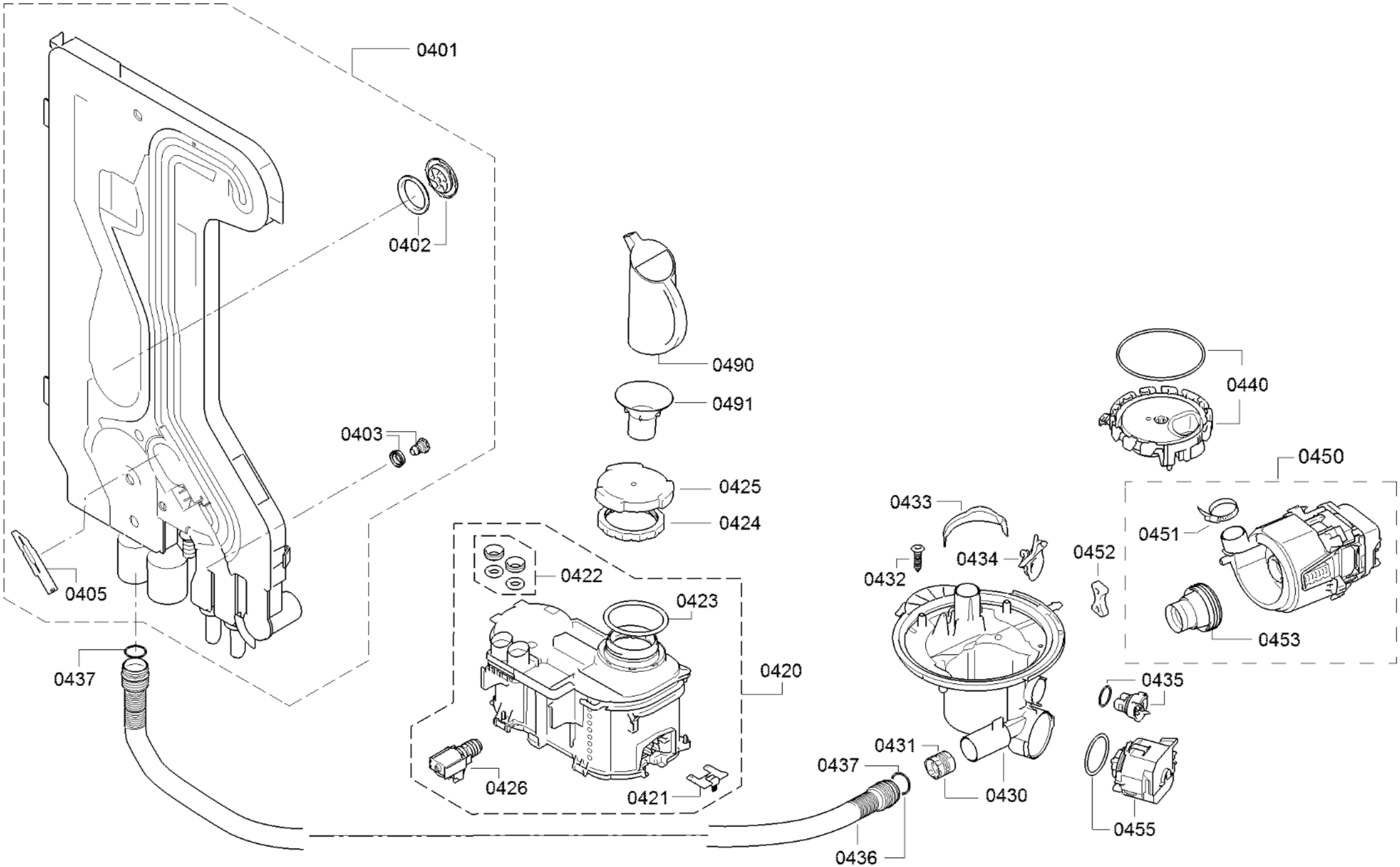

58300000182057 aet 000 b 4/6

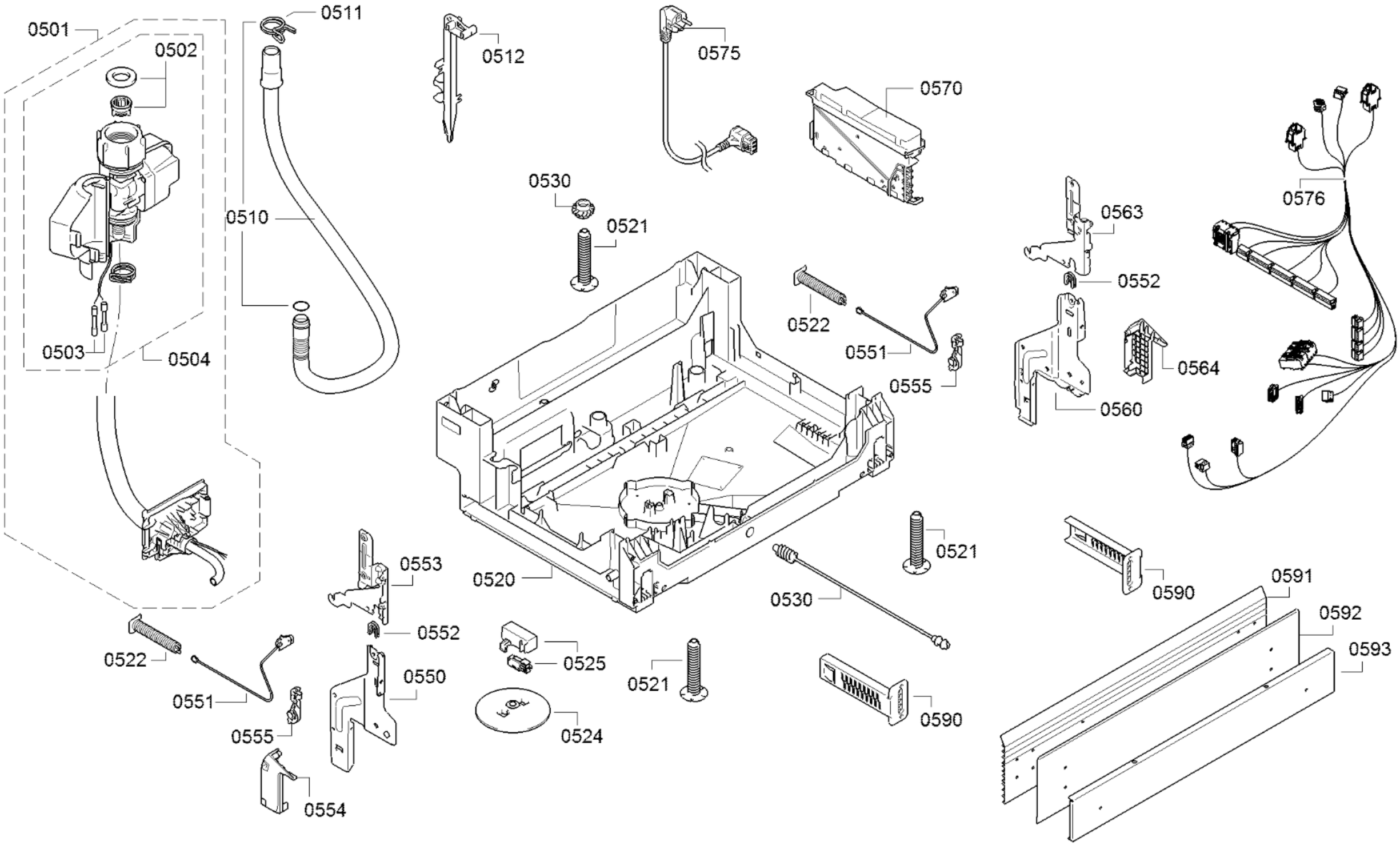

58300000182057 aet 000 b 5/6

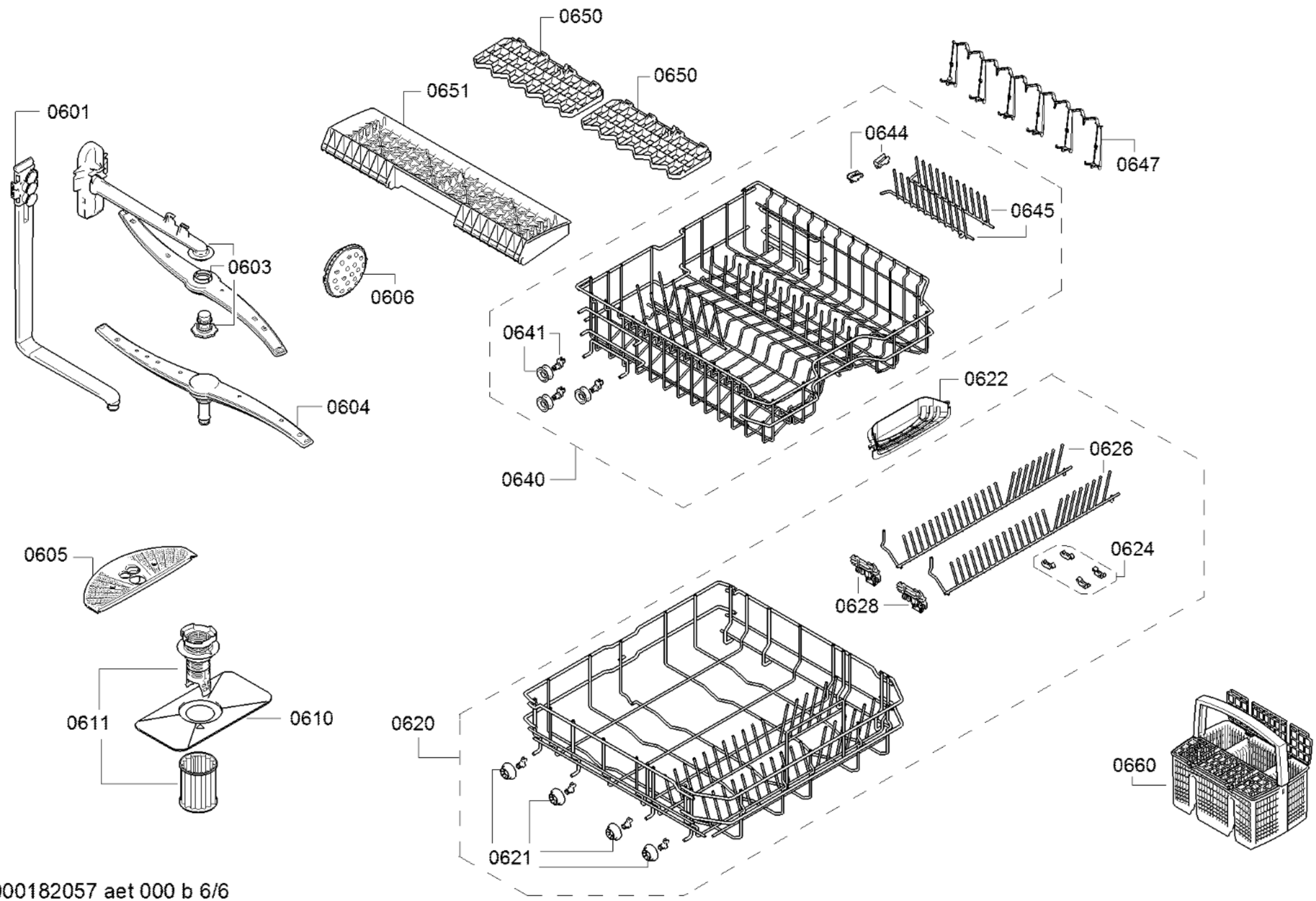

58300000182057 aet 000 b 6/6