0199

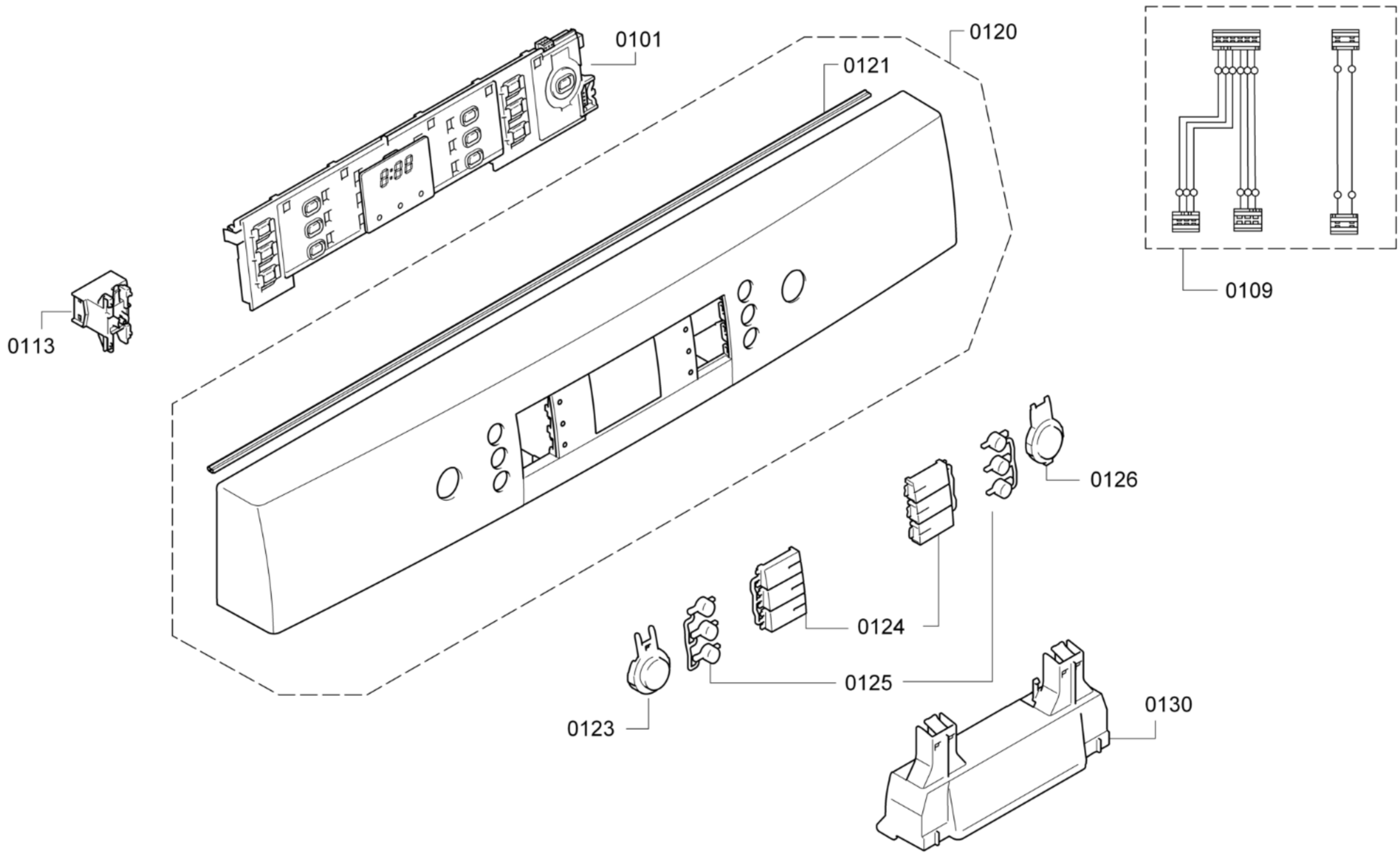

58300000176917 aet 000 a 1/6

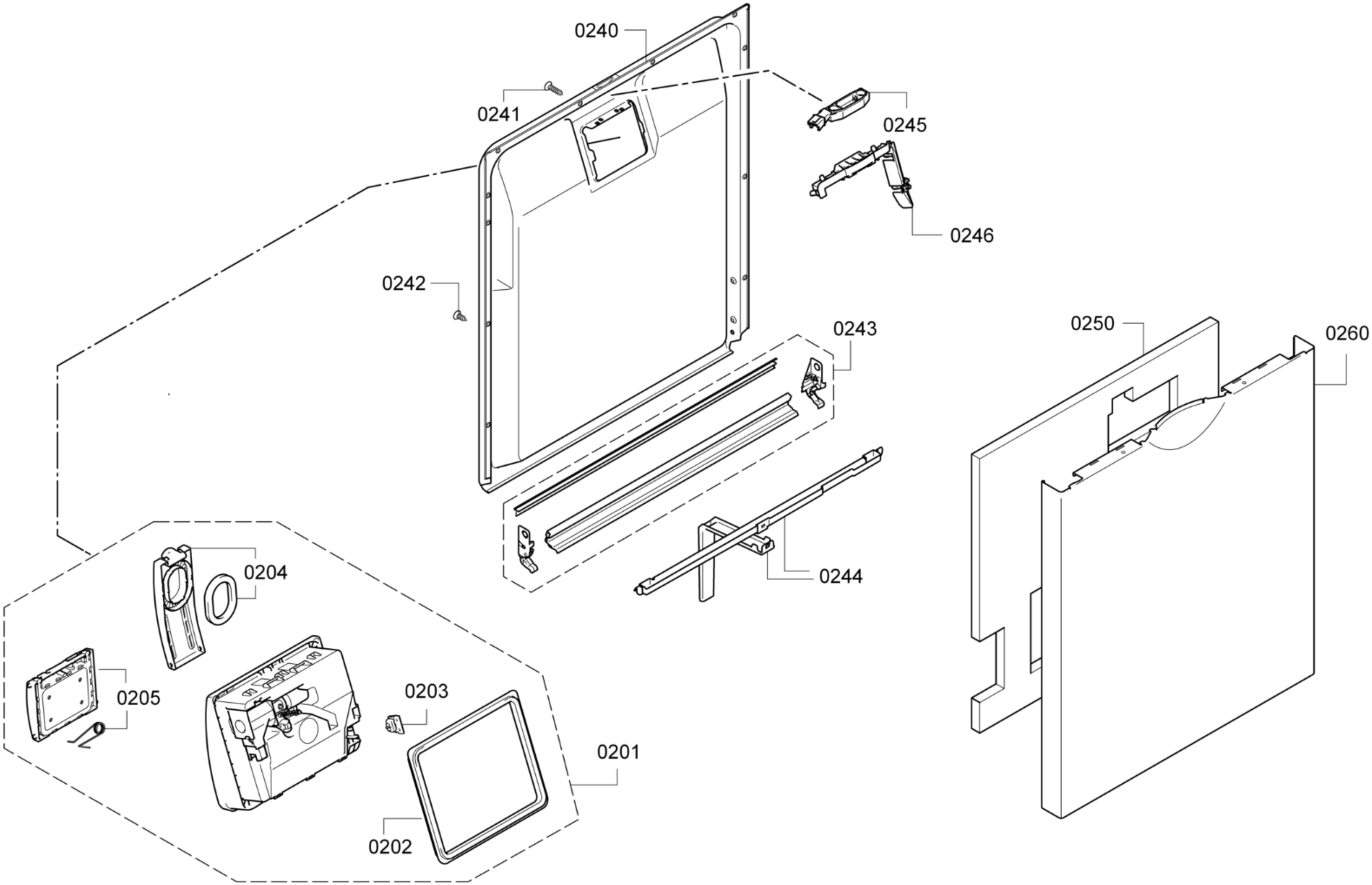

58300000176917 aet 000 a 2/6

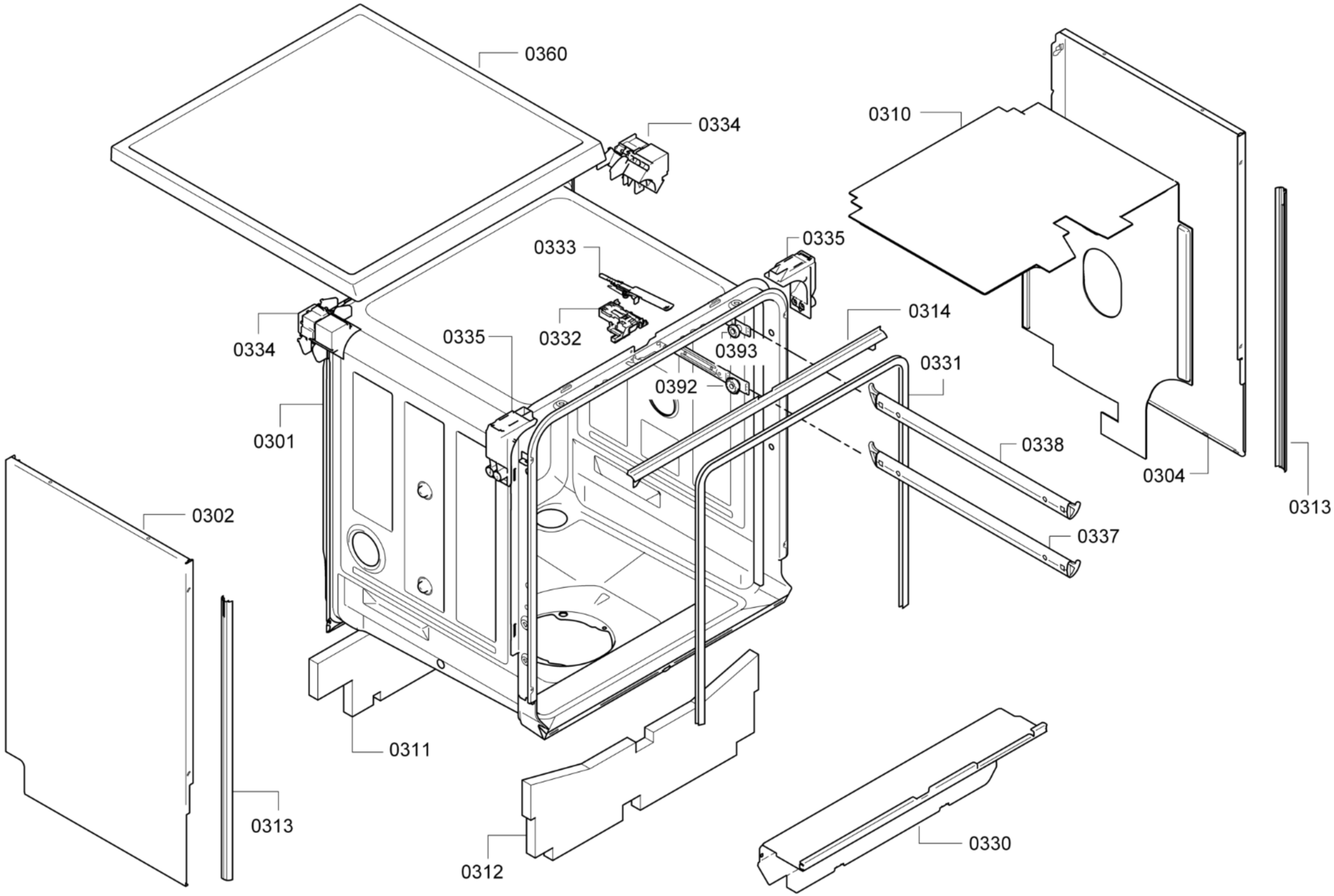

58300000176917 aet 000 a 3/6

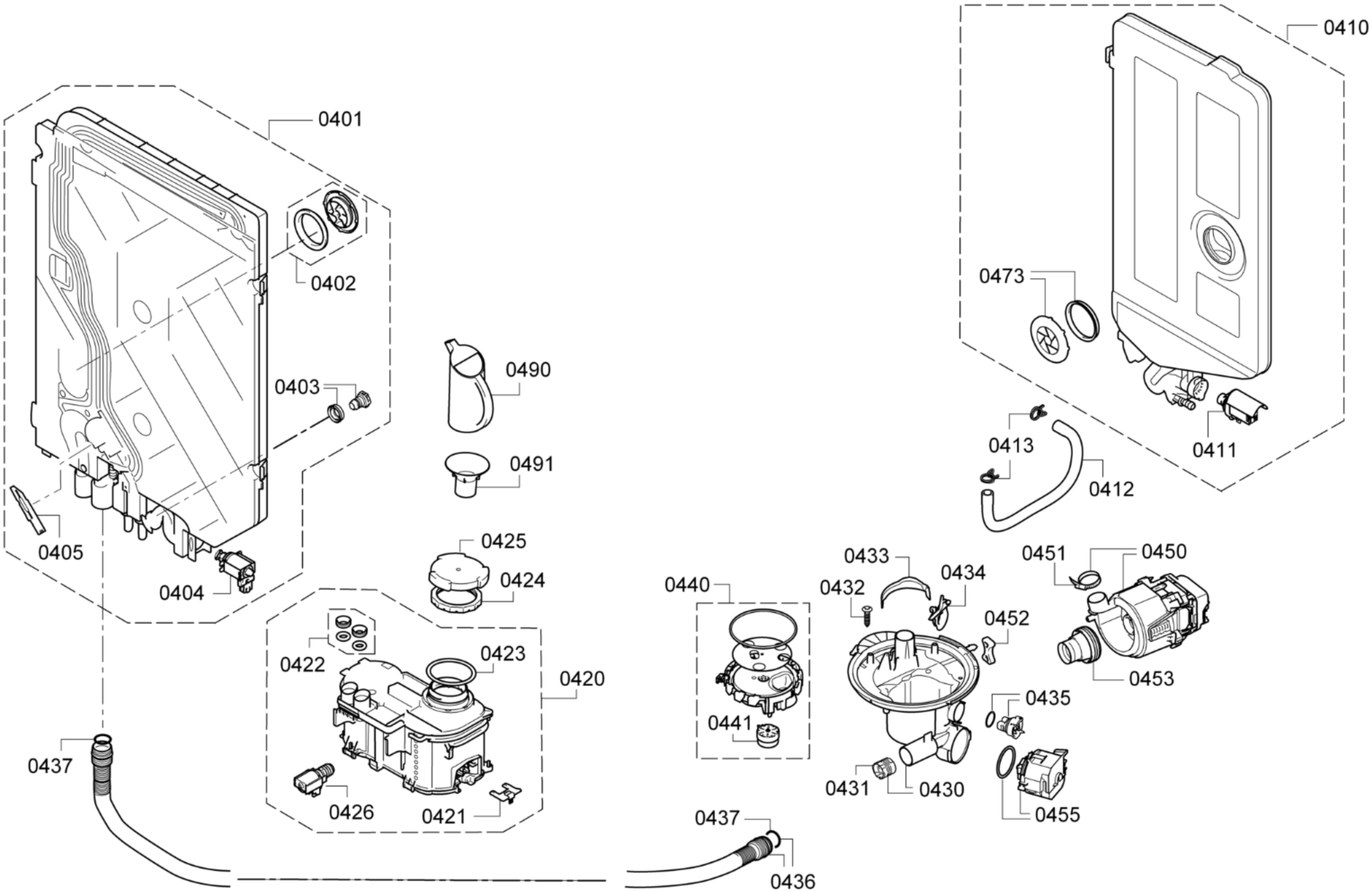

58300000176917 aet 000 a 4/6

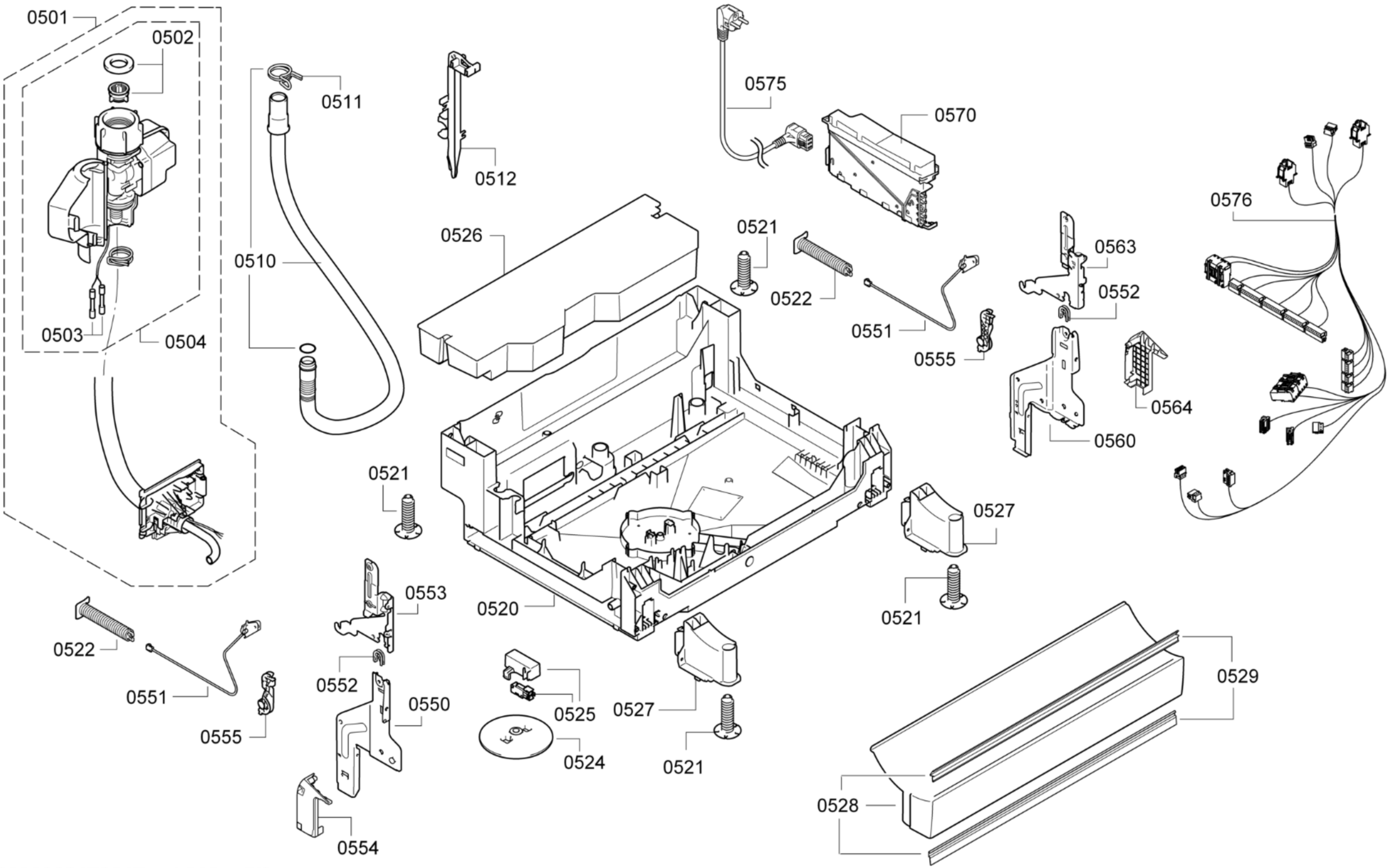

58300000176917 aet 000 a 5/6

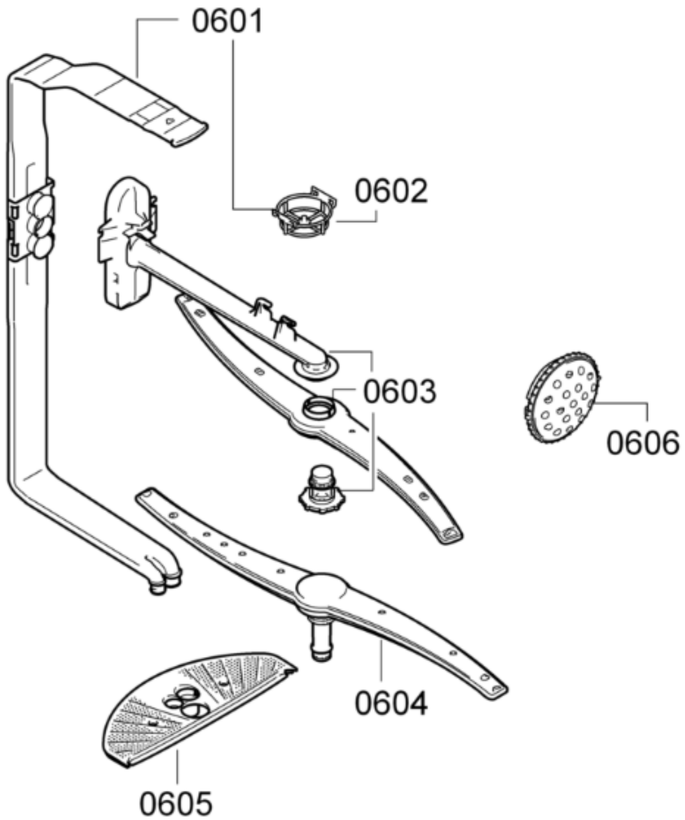
0601
0602
0603
0606
0604
0605

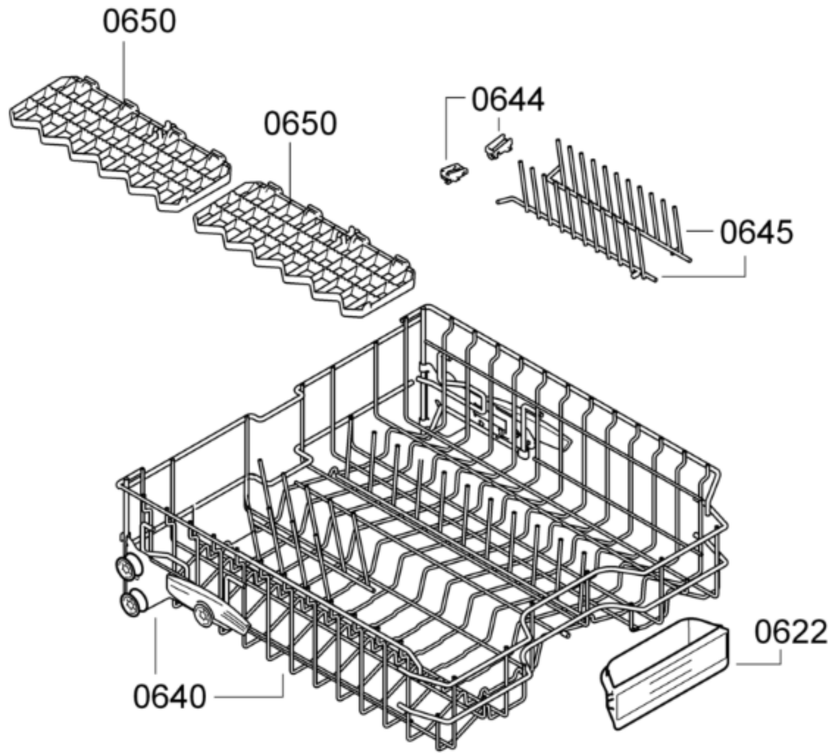
0650
0650
0644
0645
0640
0622

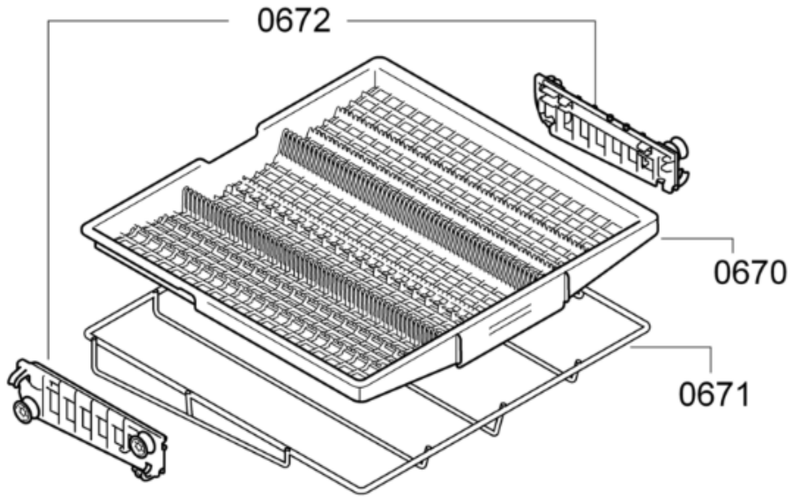
0672
0670
0671

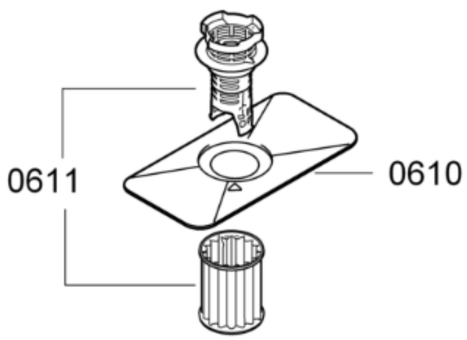
0611
0610

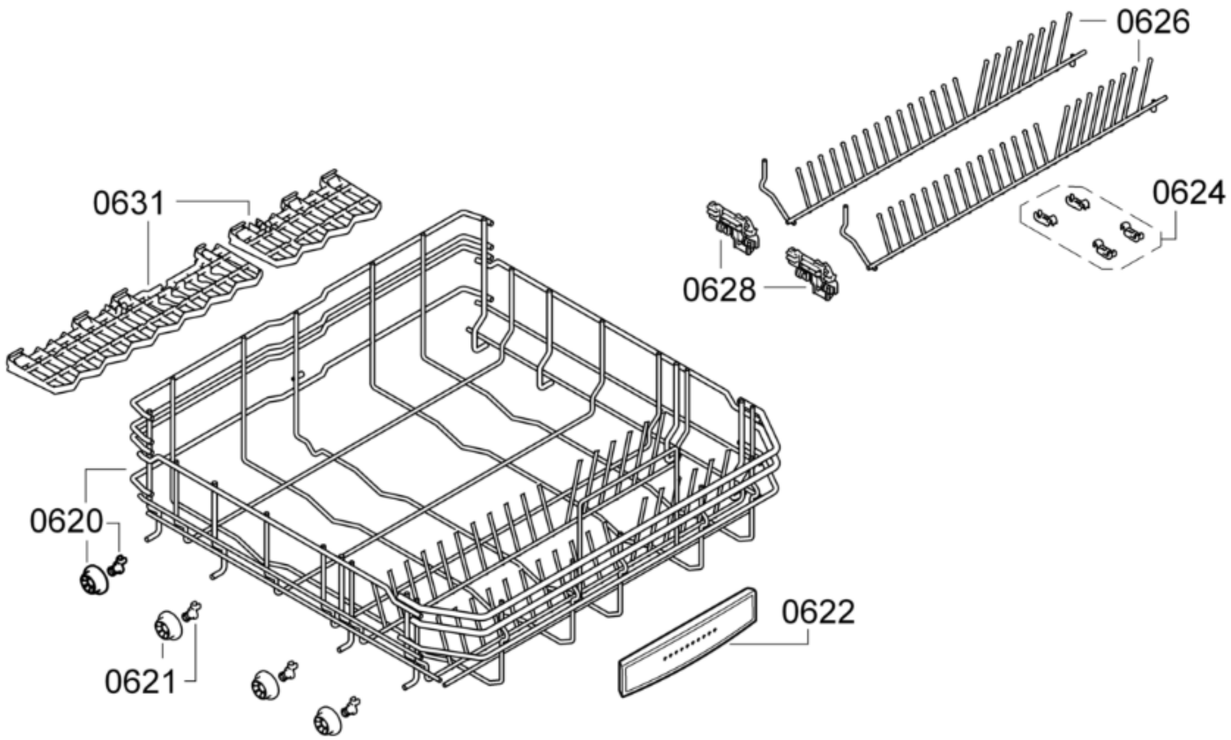
0626
0624
0631
0628
0620
0622
0621