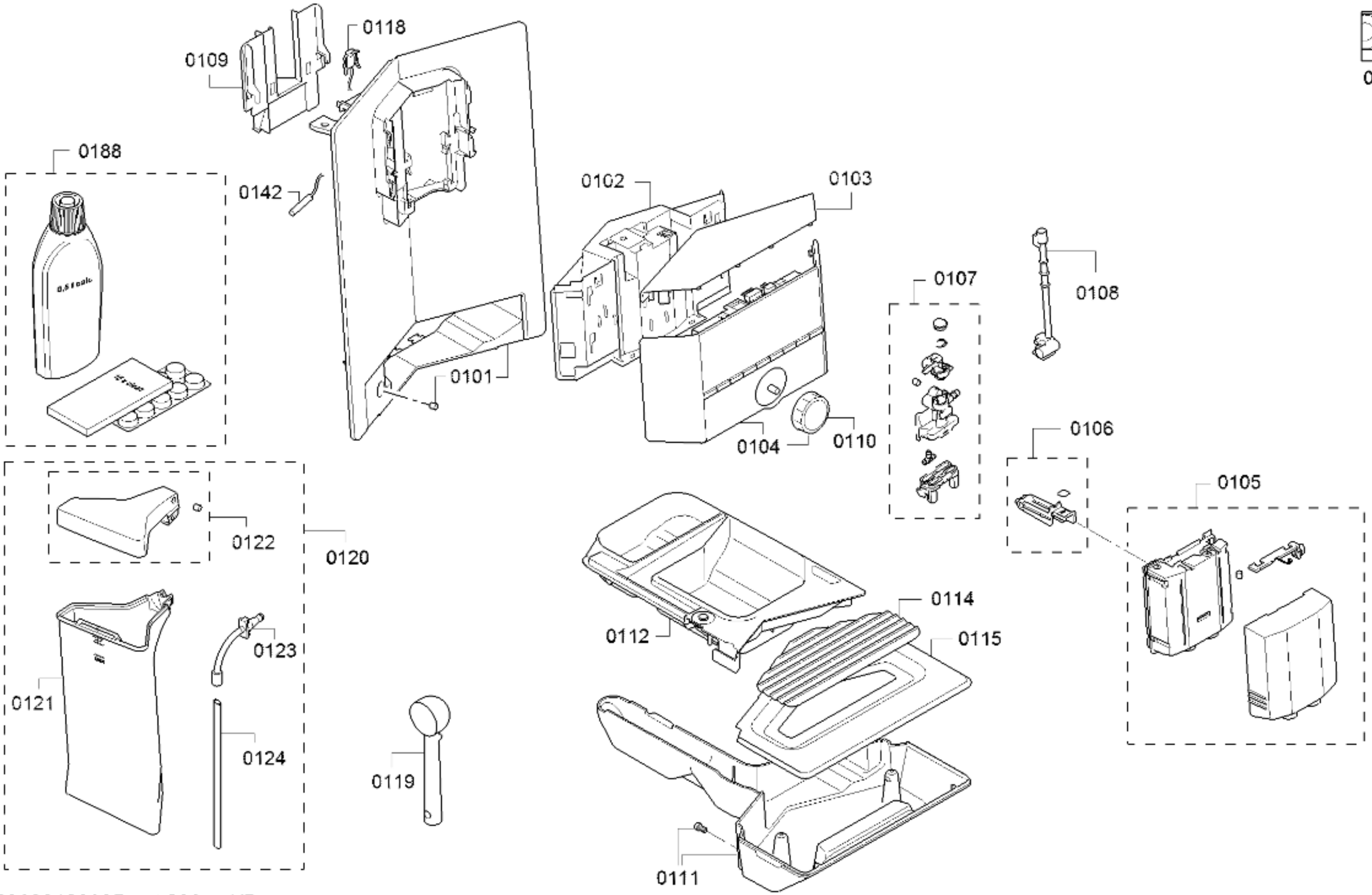


58300000189905 aet 000 g 1/5

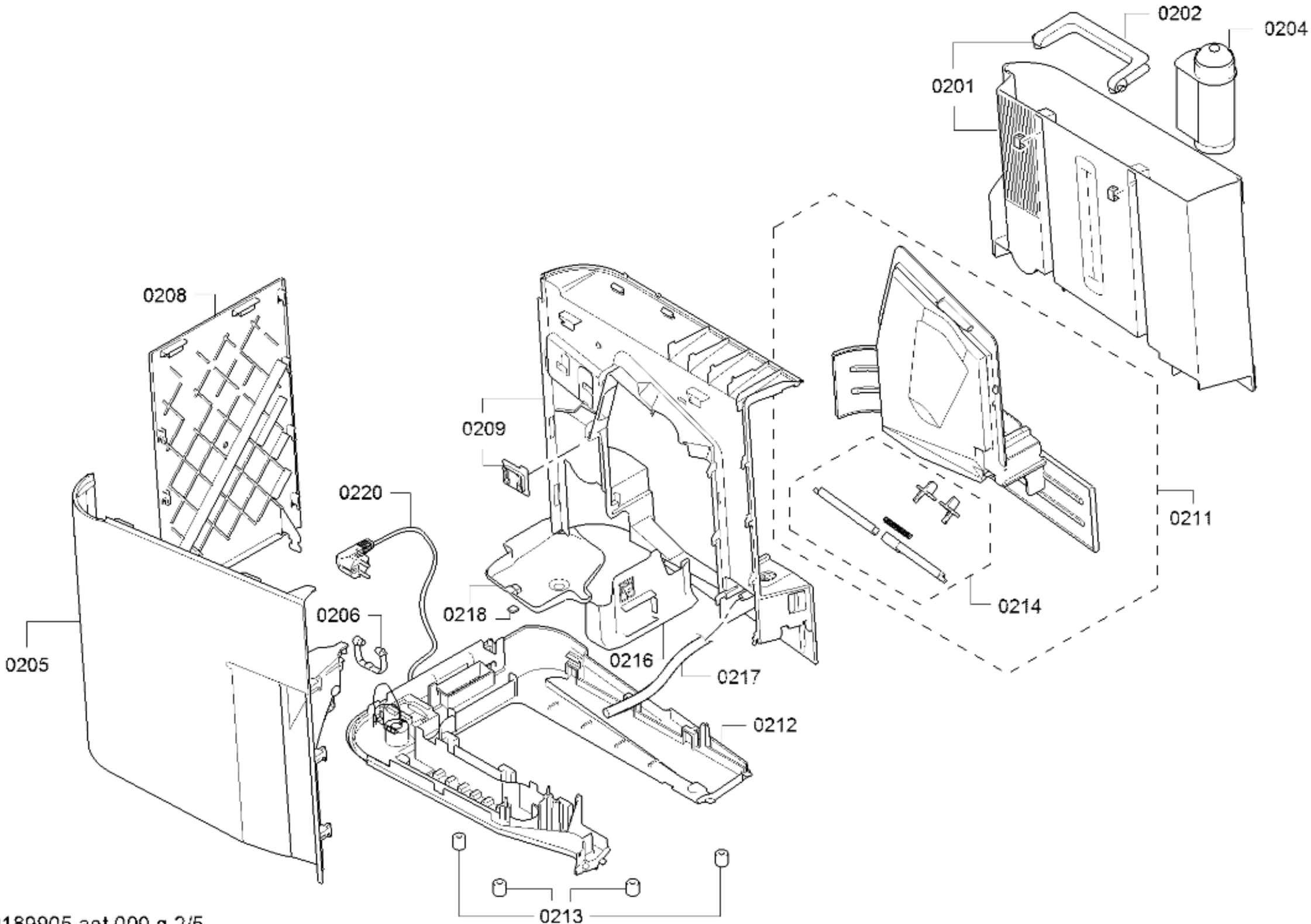


58300000189905 aet 000 g 2/5

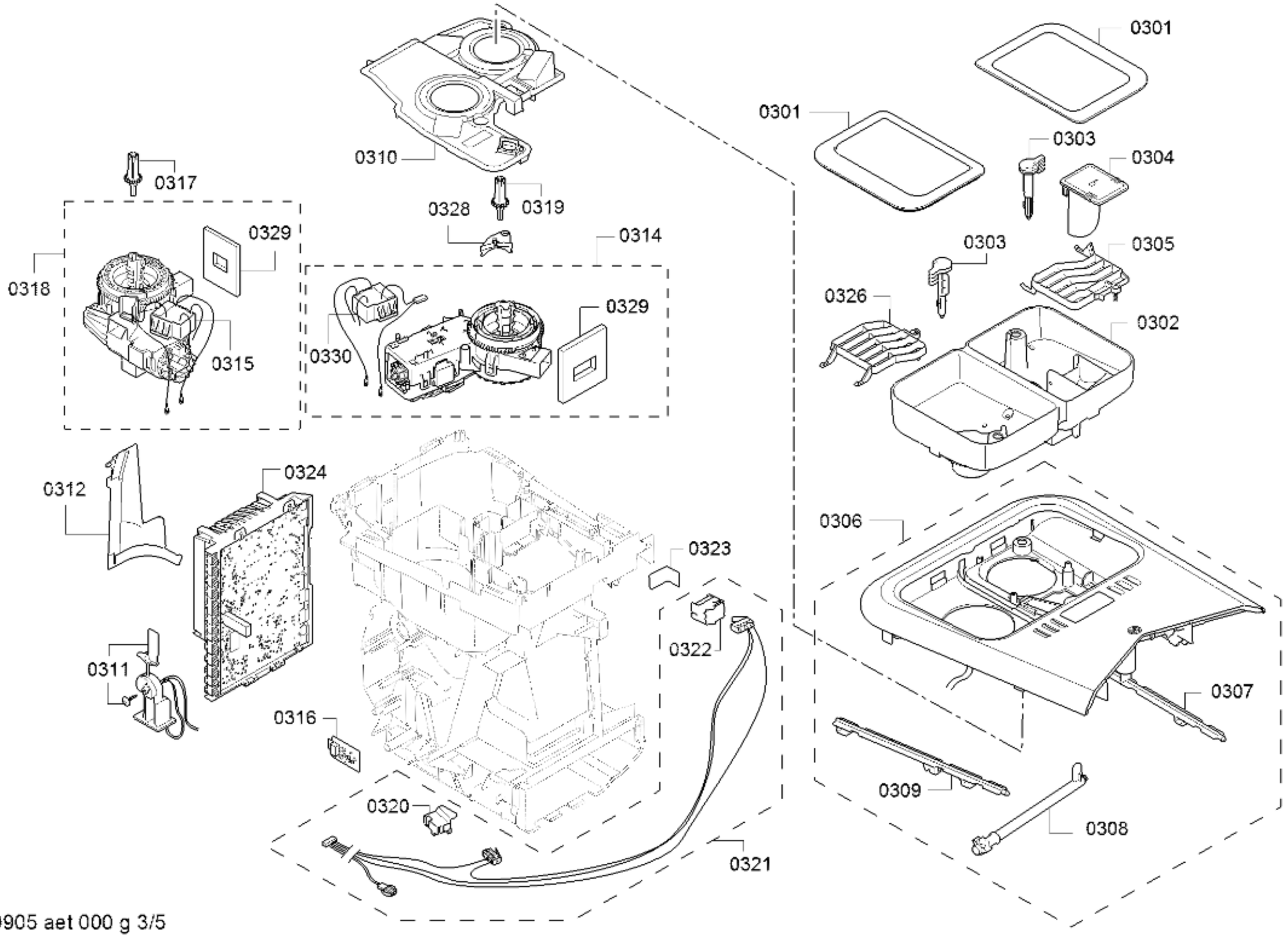


58300000189905 aet 000 g 3/5

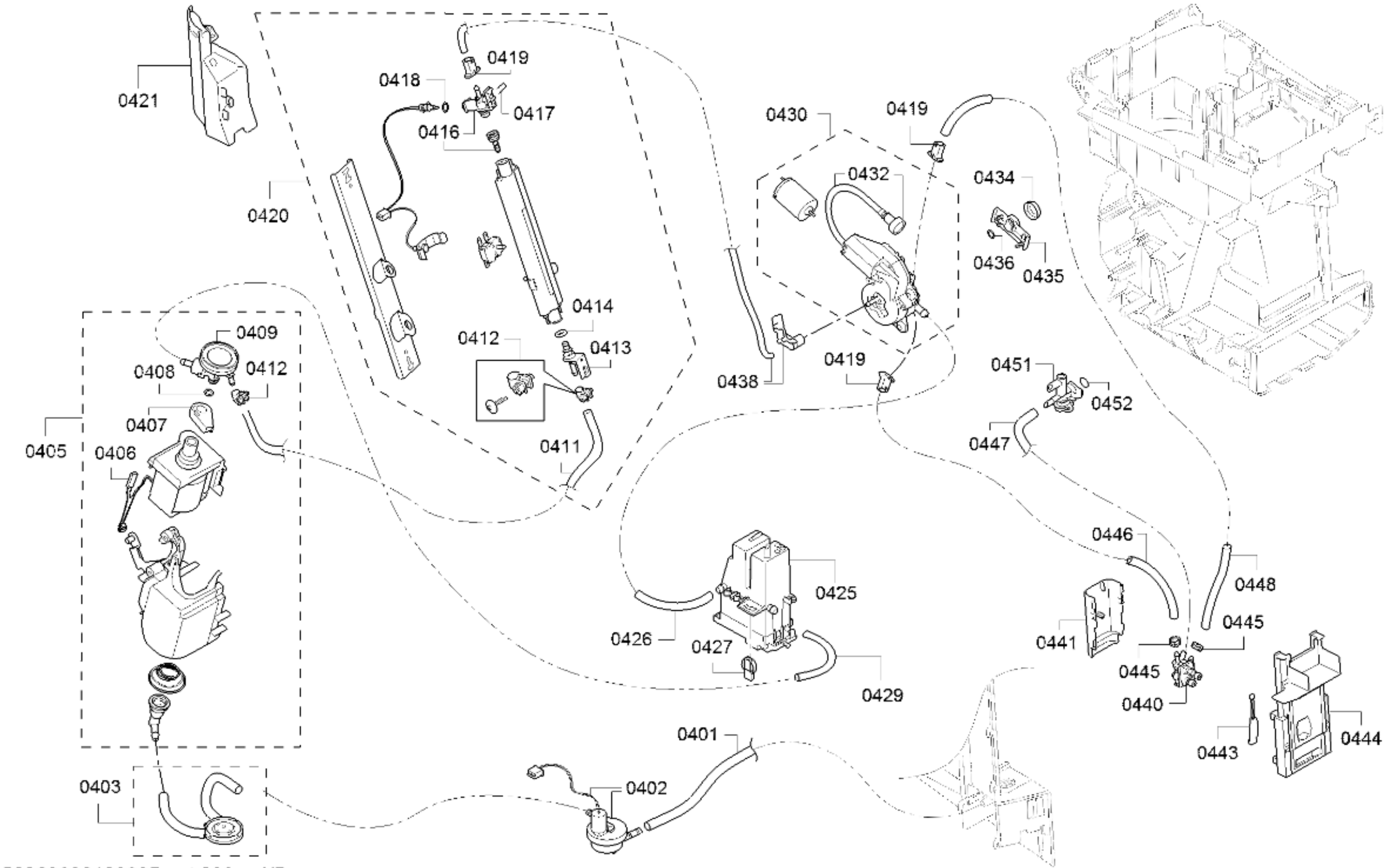


58300000189905 aet 000 g 4/5

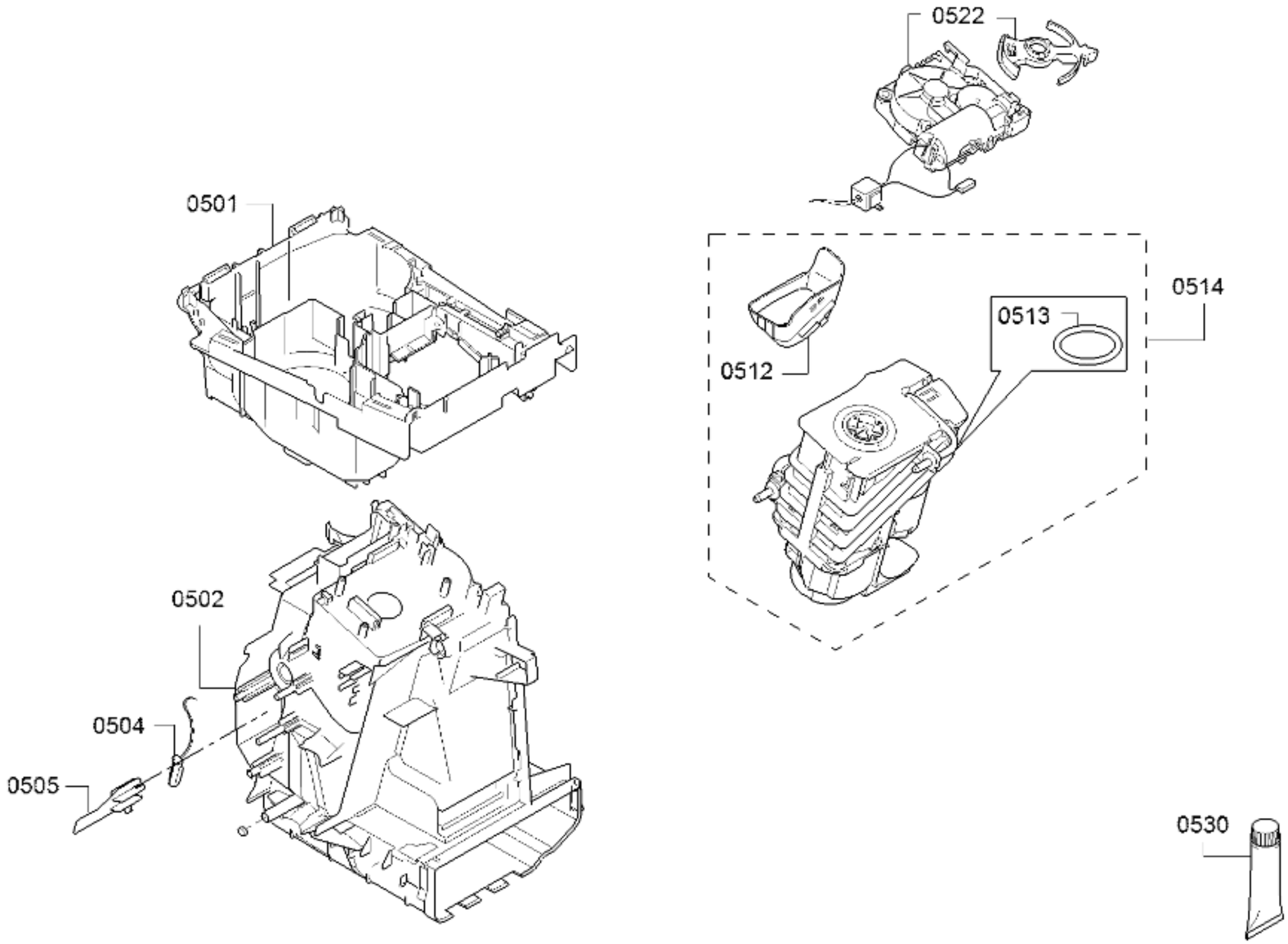


58300000189905 aet 000 g 5/5