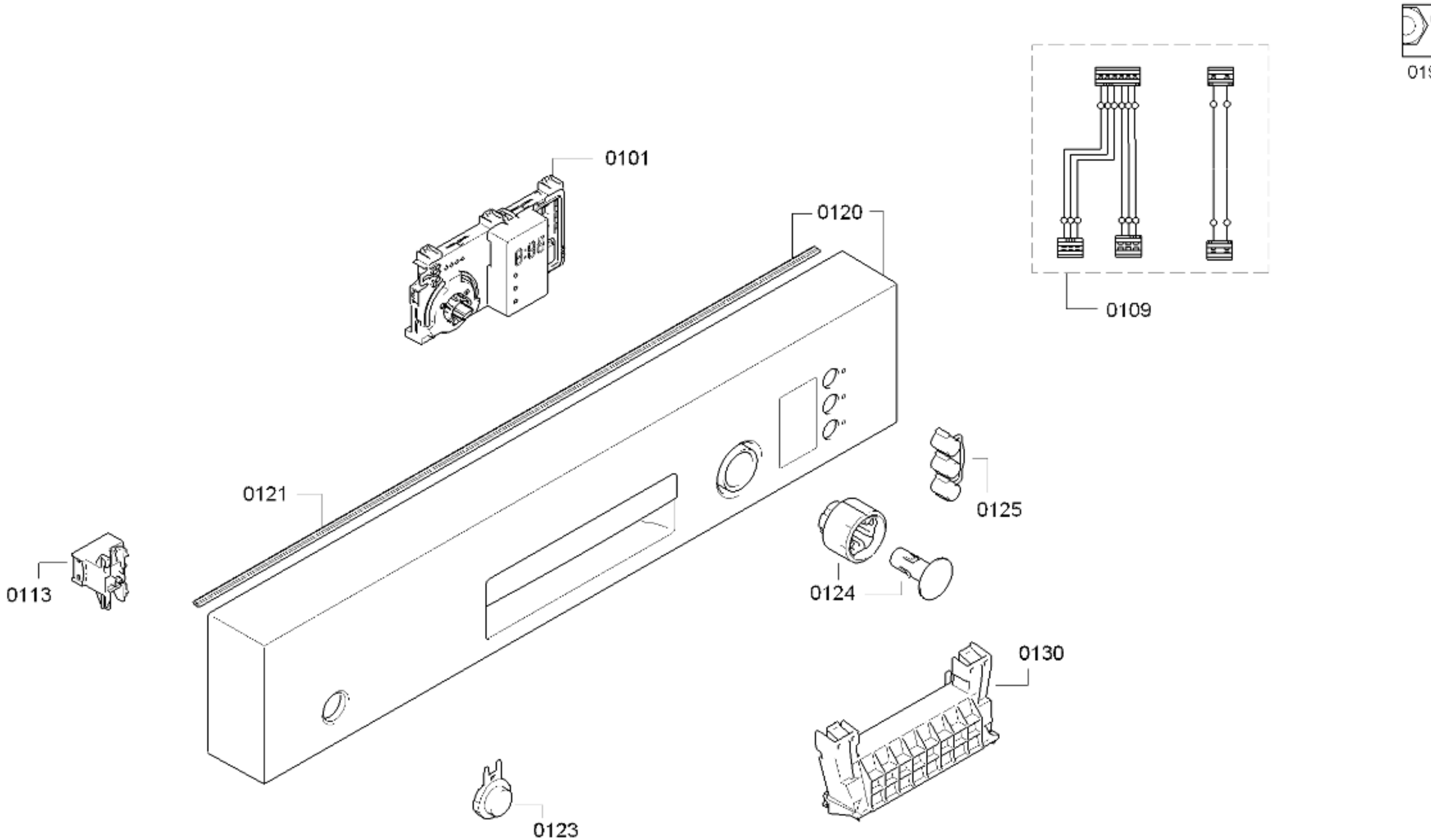
0199
0101
0120
0109
0121
0125
0113
0124
0130
0123

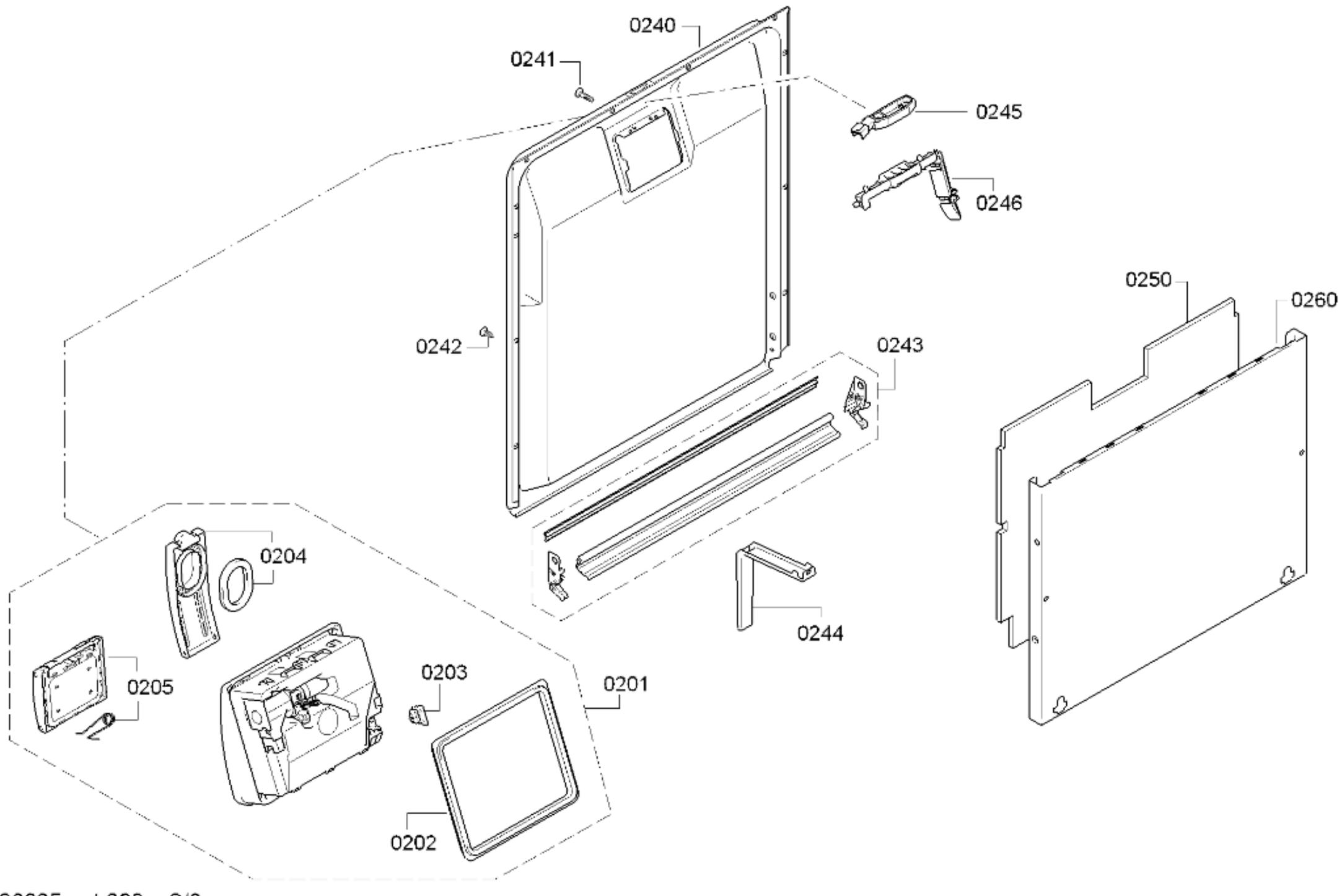

58300000186005 aet 000 a 2/6

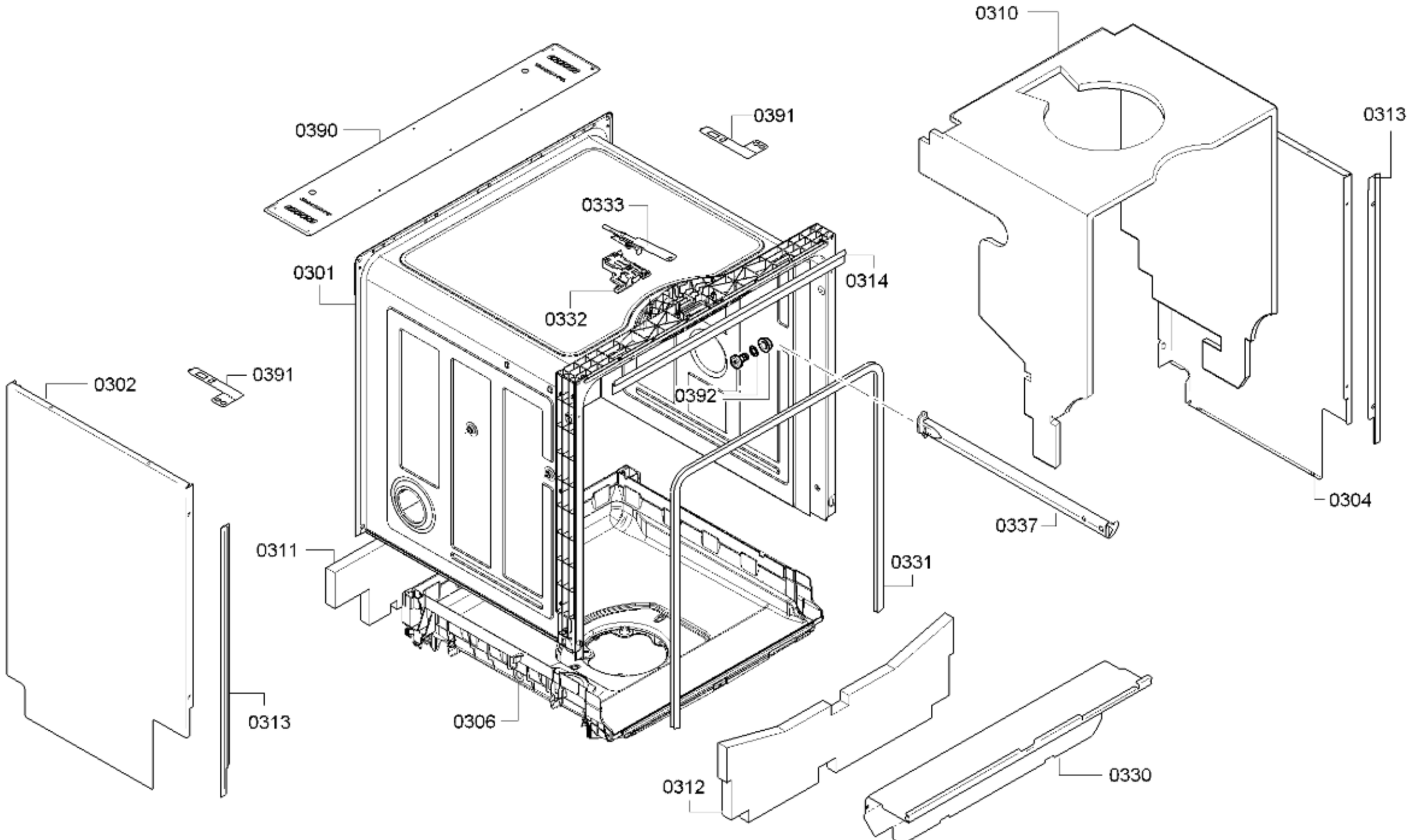

58300000186005 aet 000 a 3/6

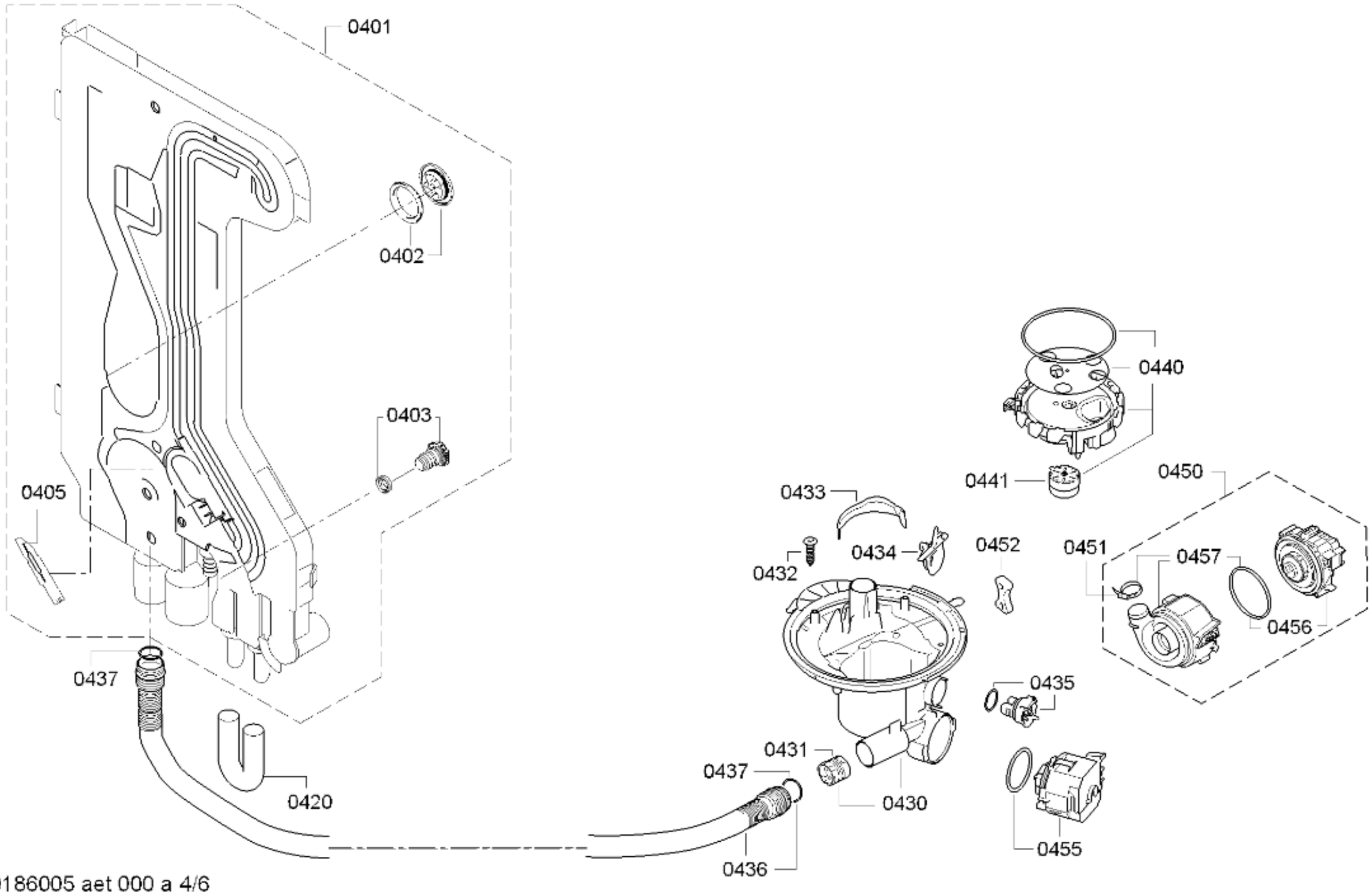

58300000186005 aet 000 a 4/6

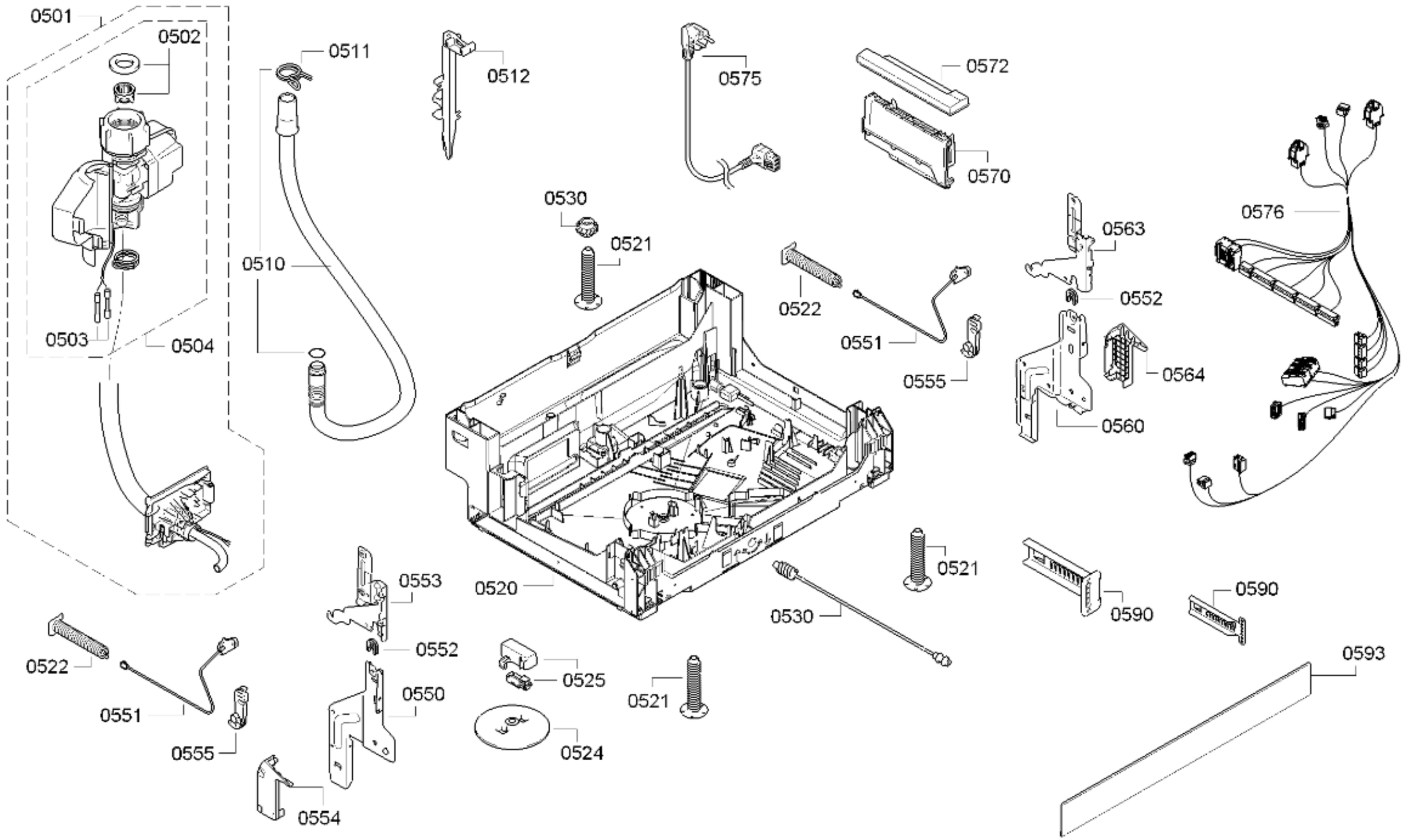

58300000186005 aet 000 a 5/6

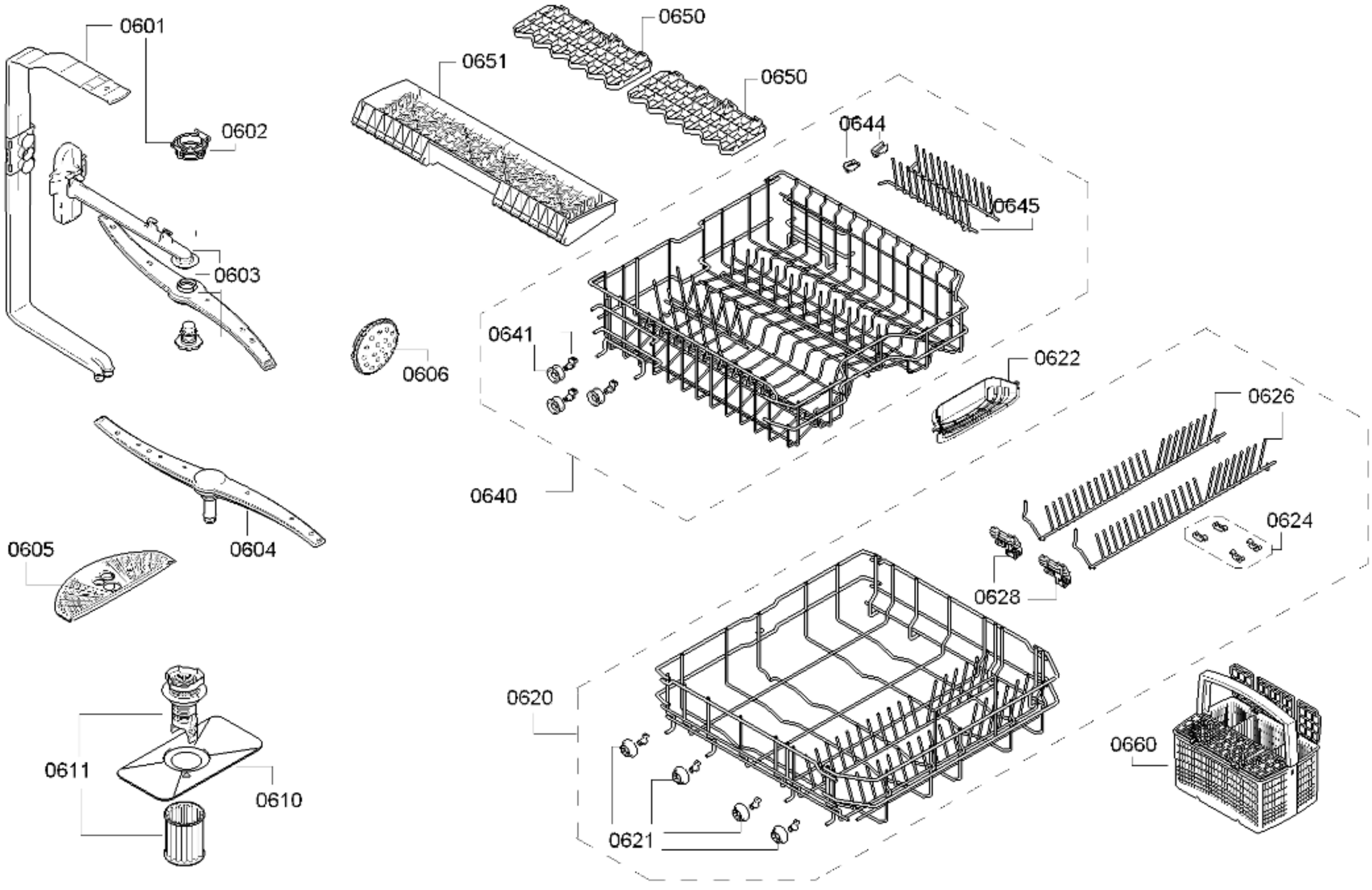

58300000186005 aet 000 a 6/6