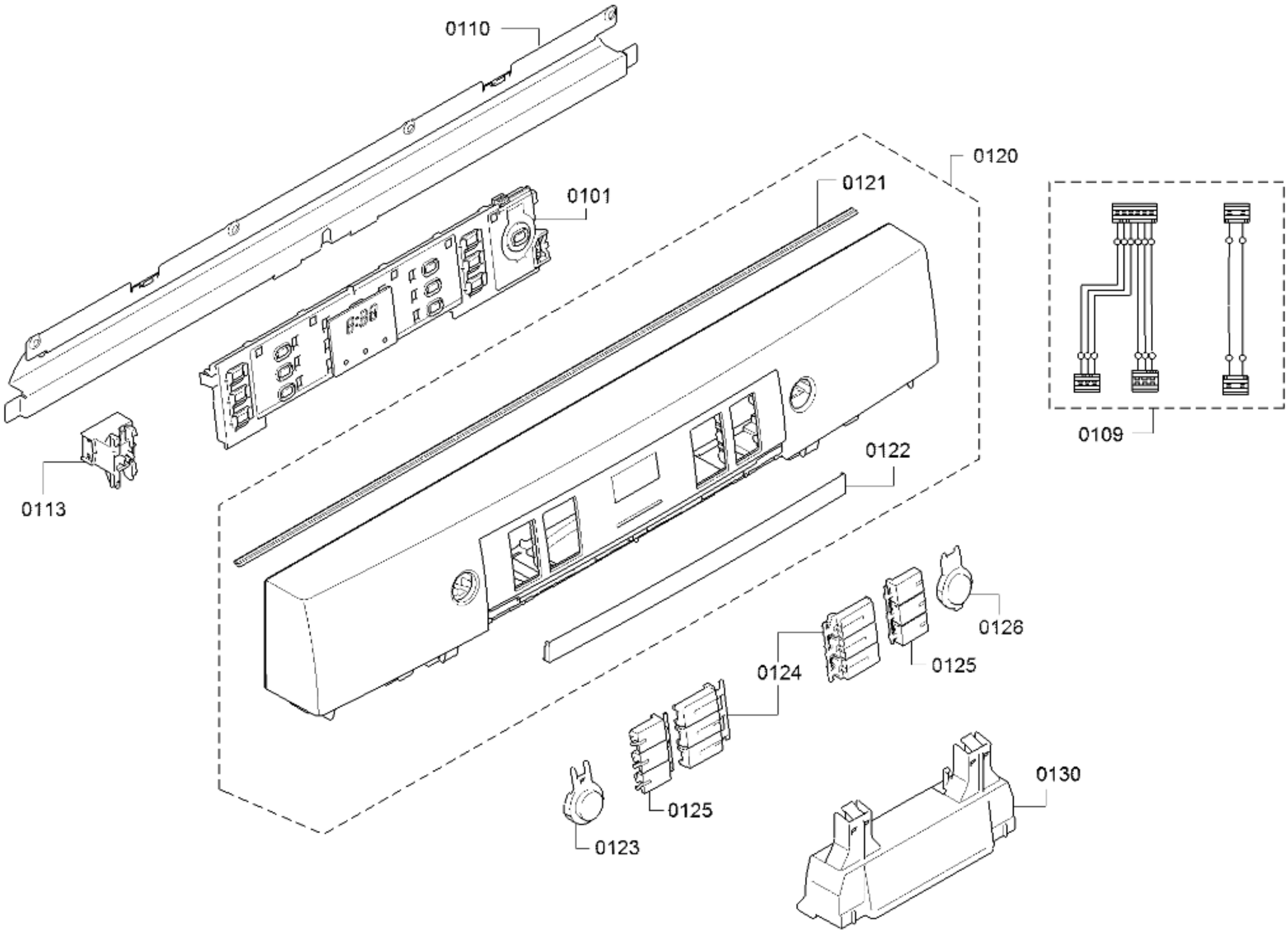

58300000198857 aet 000 d 1/6

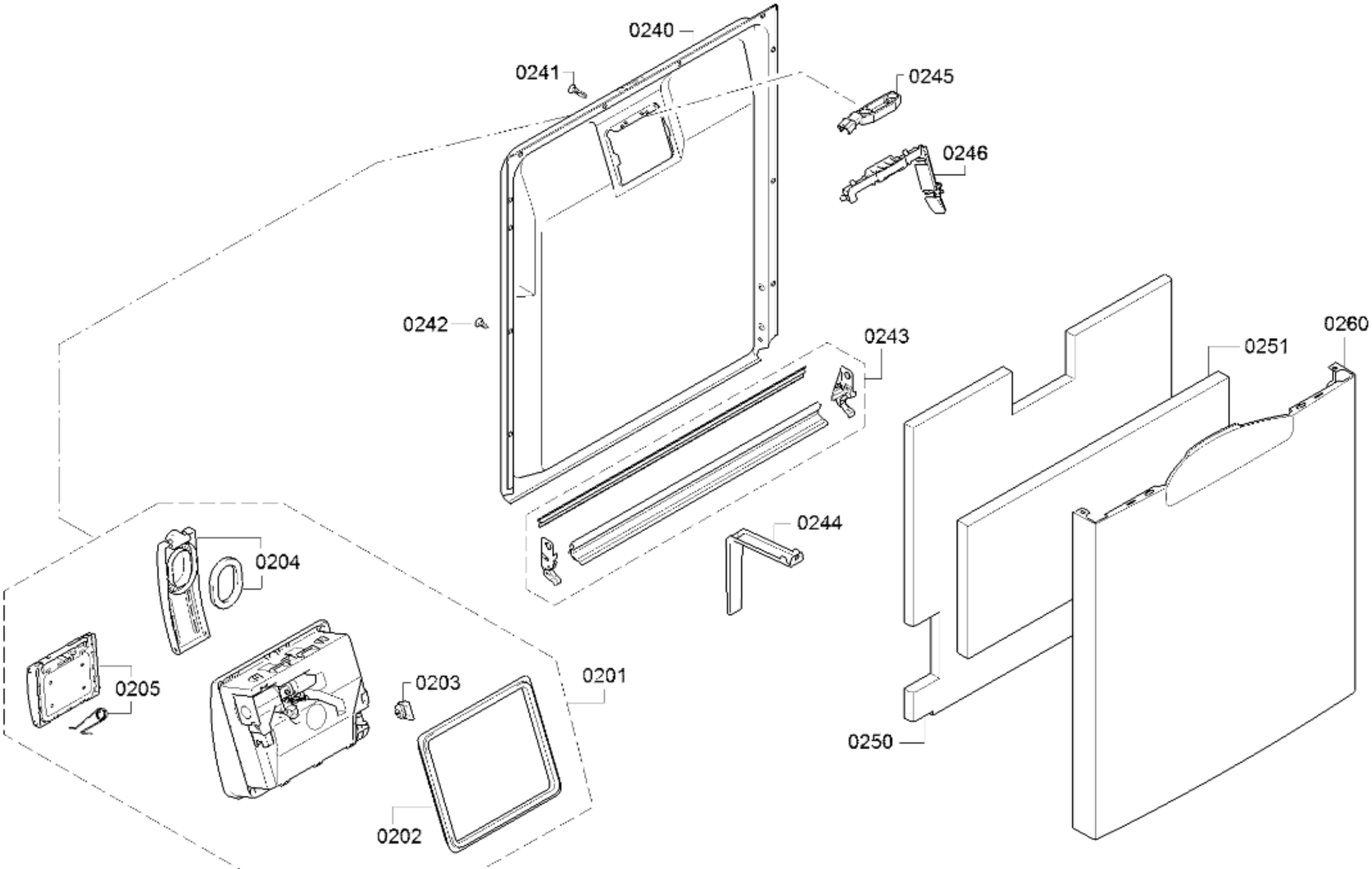

58300000198857 aet 000 d 2/6

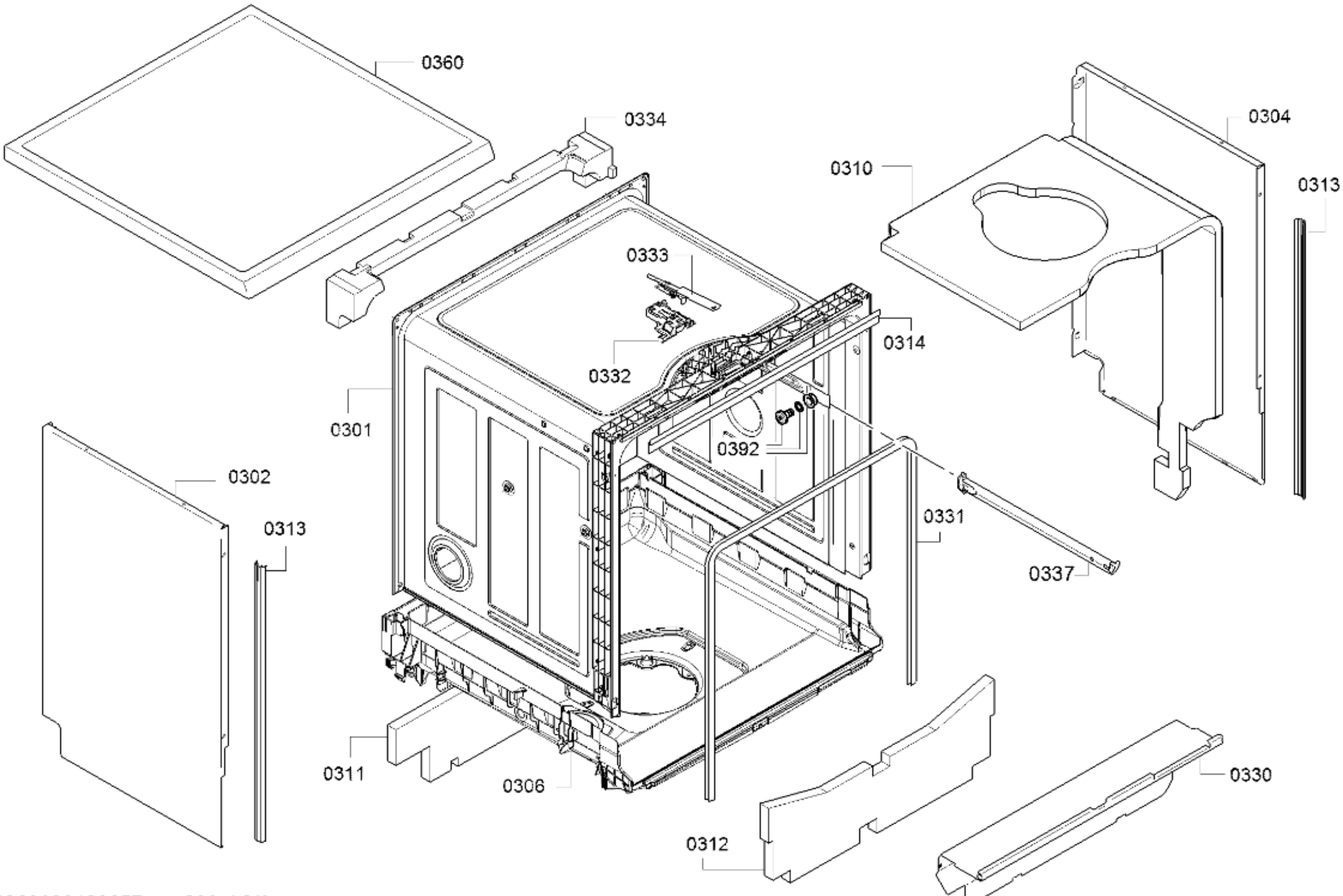

58300000198857 aet 000 d 3/6

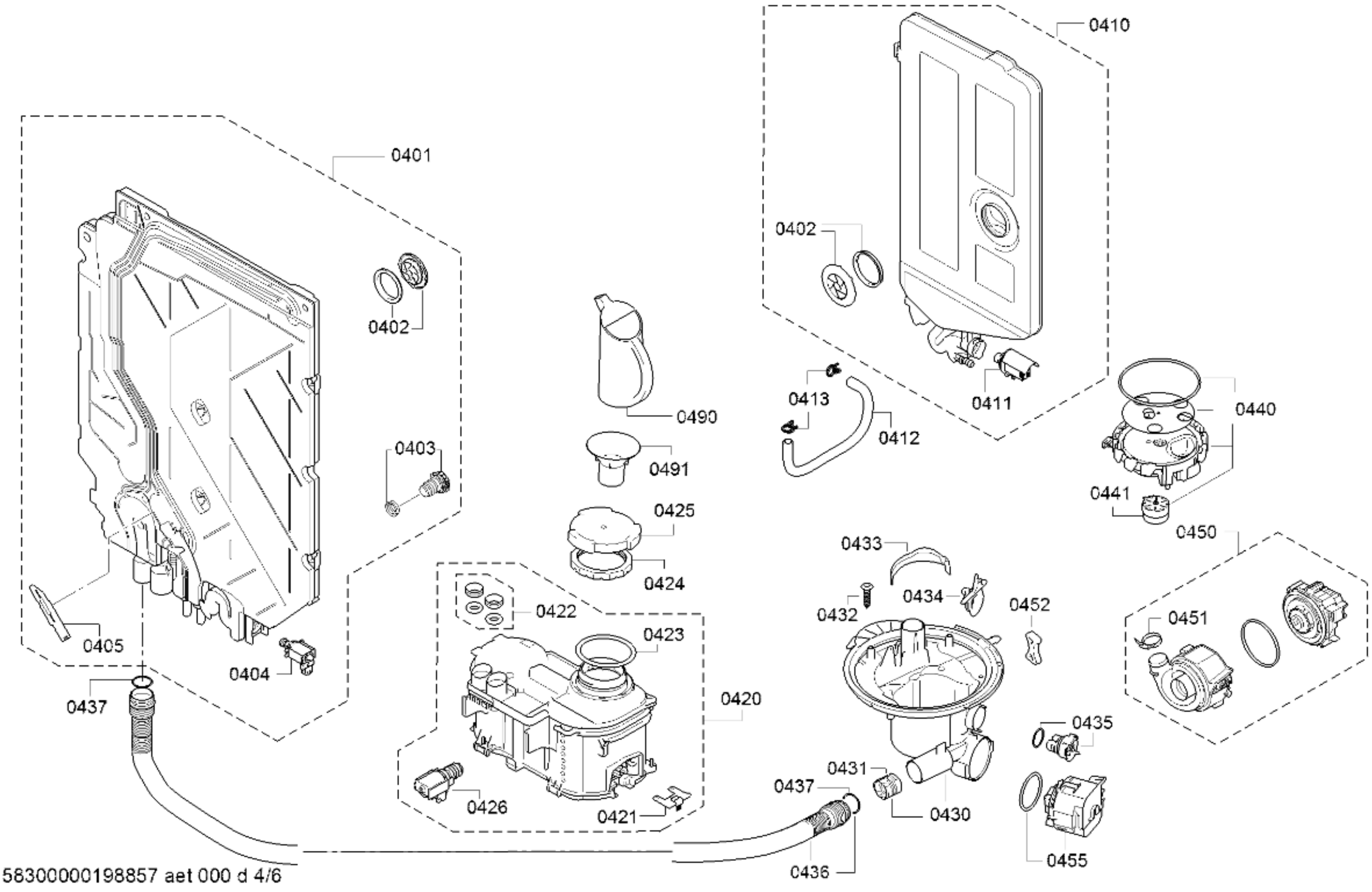

58300000198857 aet 000 d 4/6

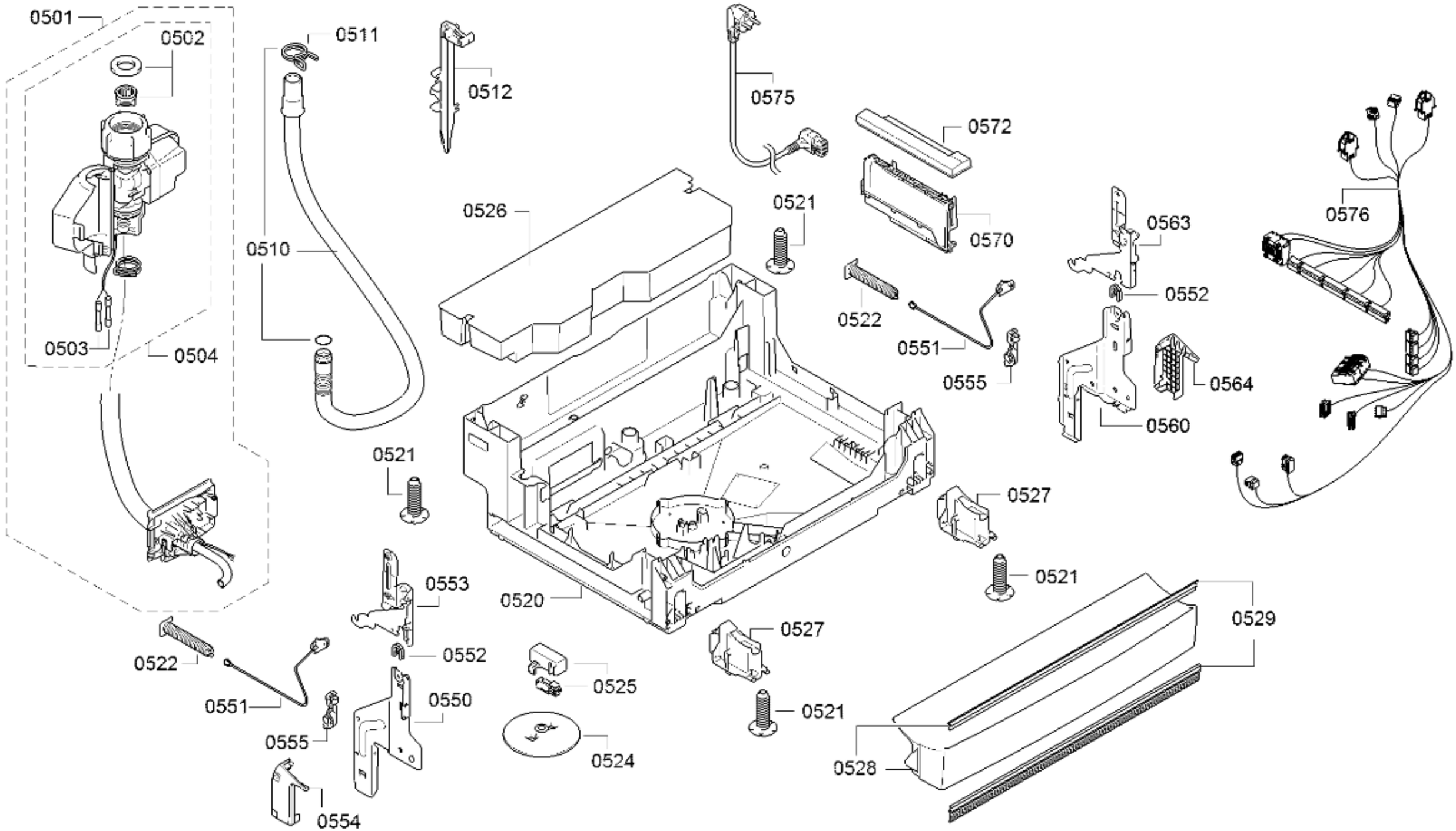

58300000198857 aet 000 d 5/6

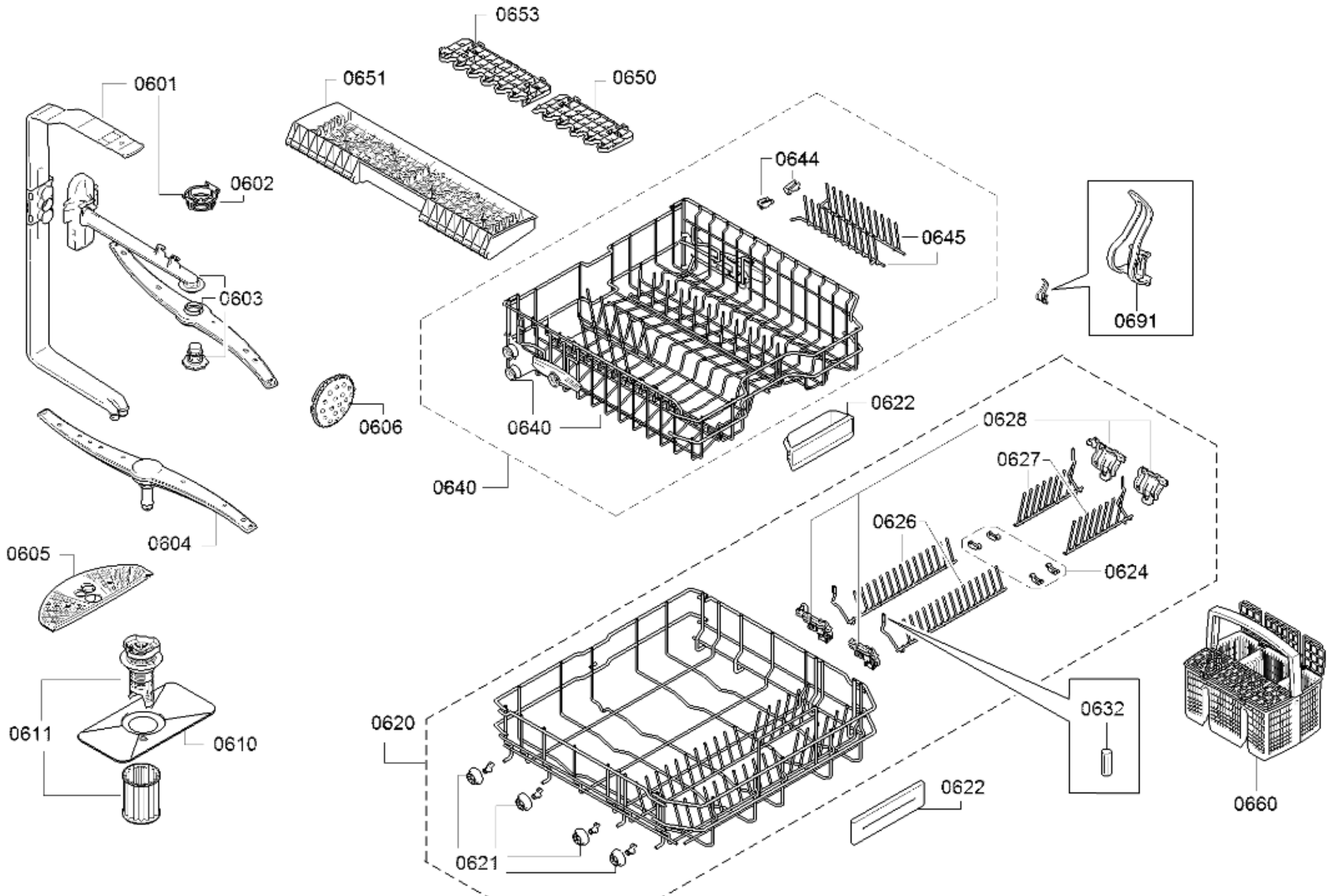

58300000198857 aet 000 d 6/6