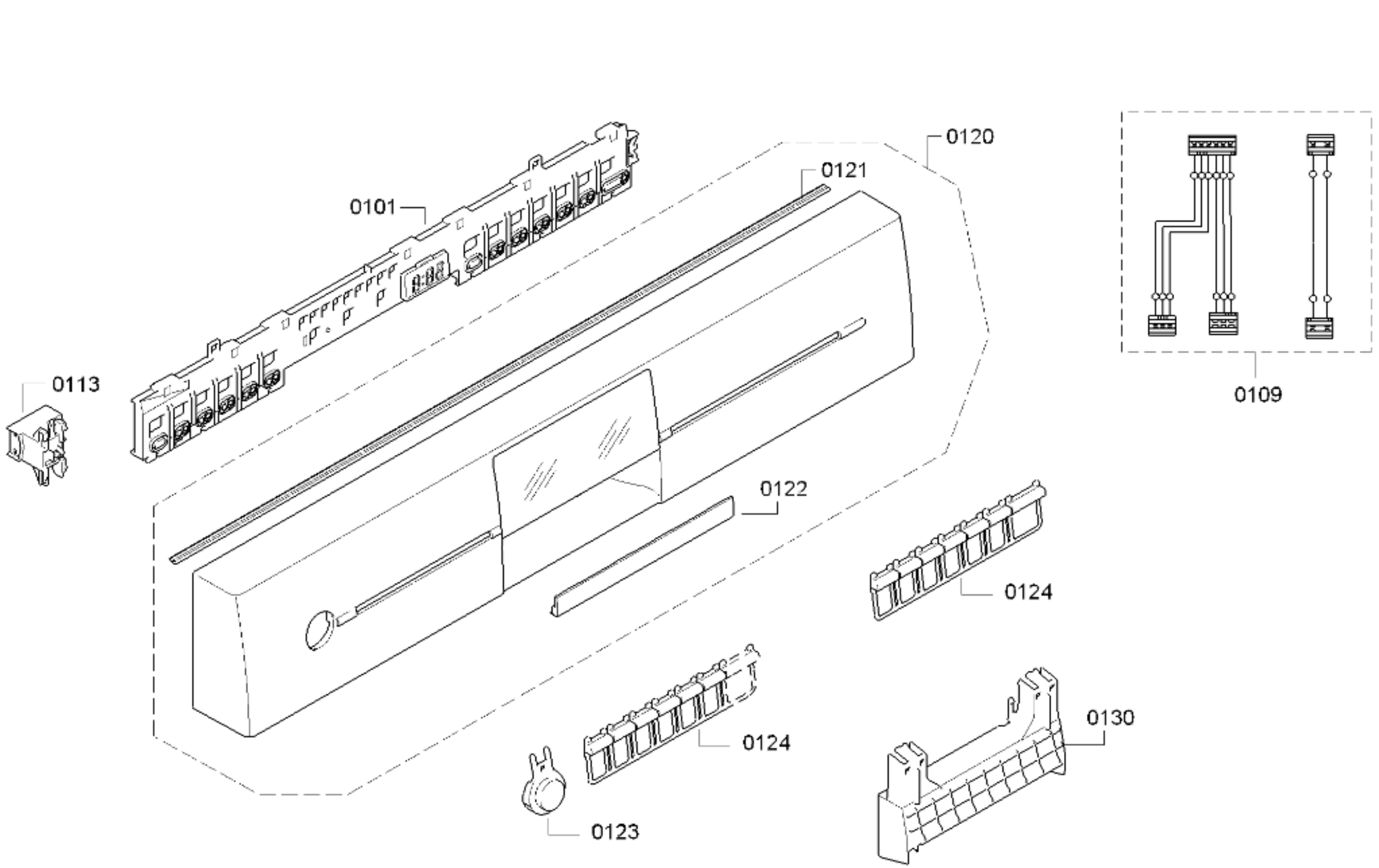
0199
0120
0121
0101
0113
0109
0122
0124
0124
0130
0123

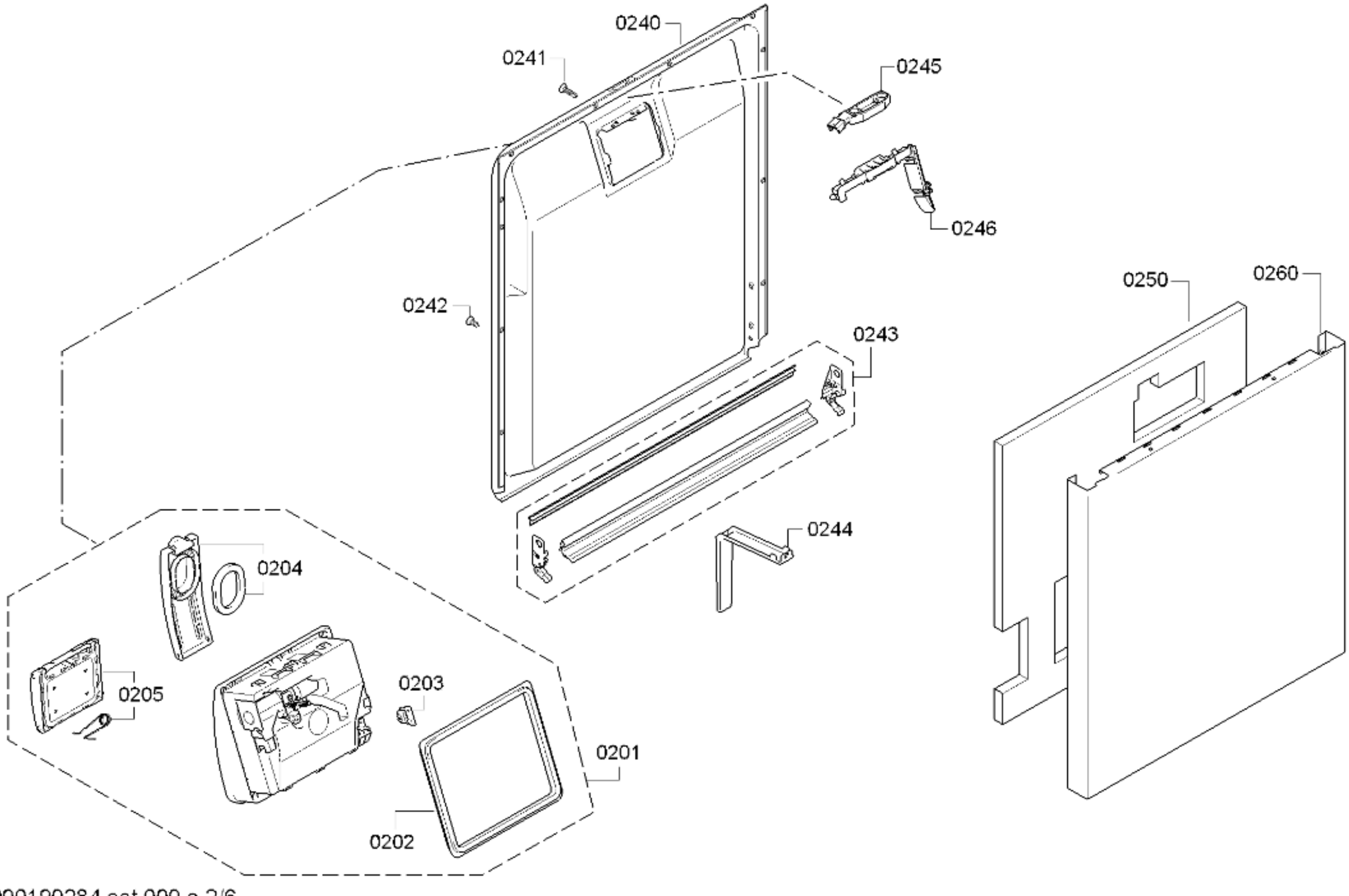

58300000190284 aet 000 a 2/6

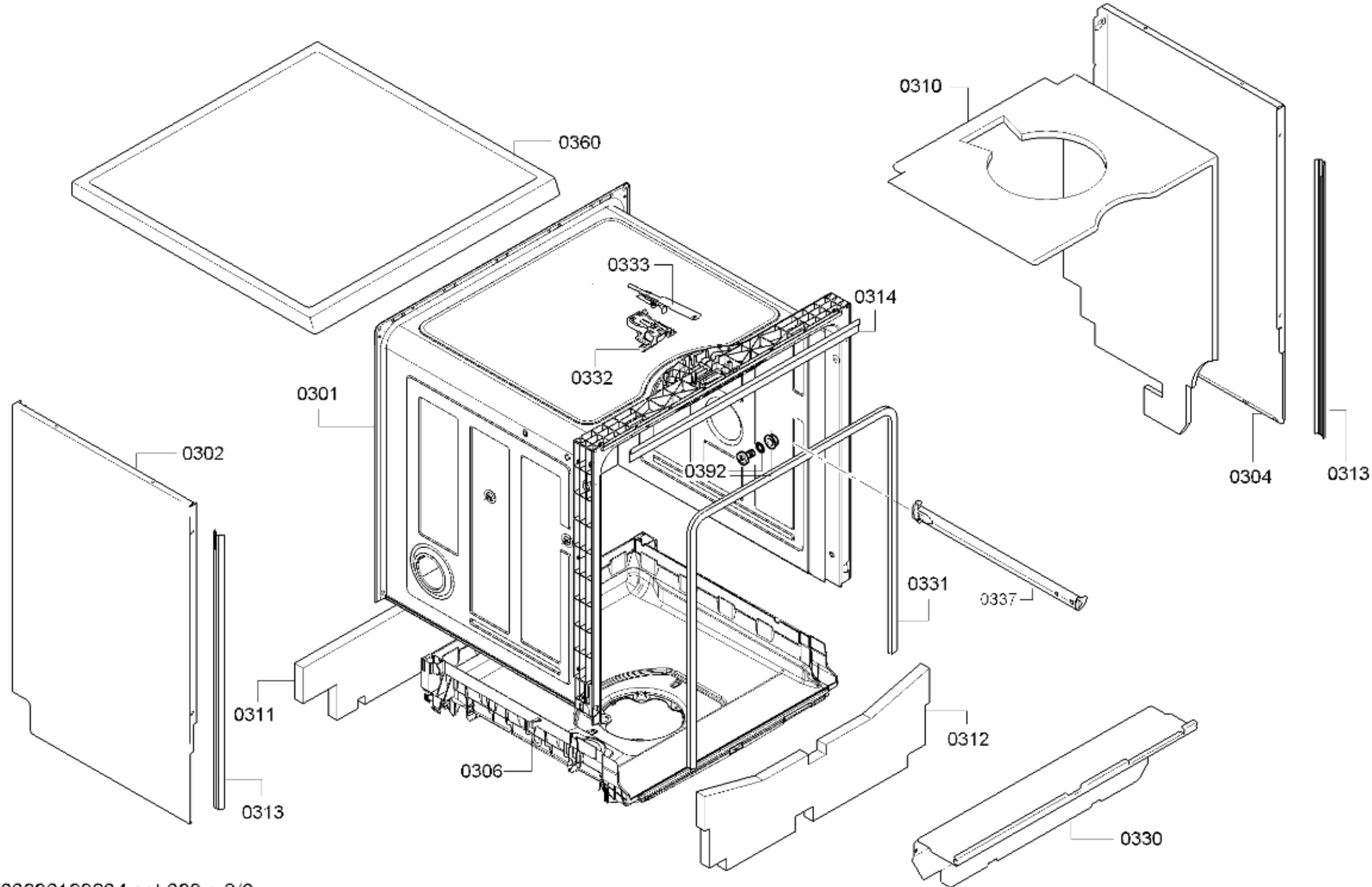

58300000190284 aet 000 a 3/6

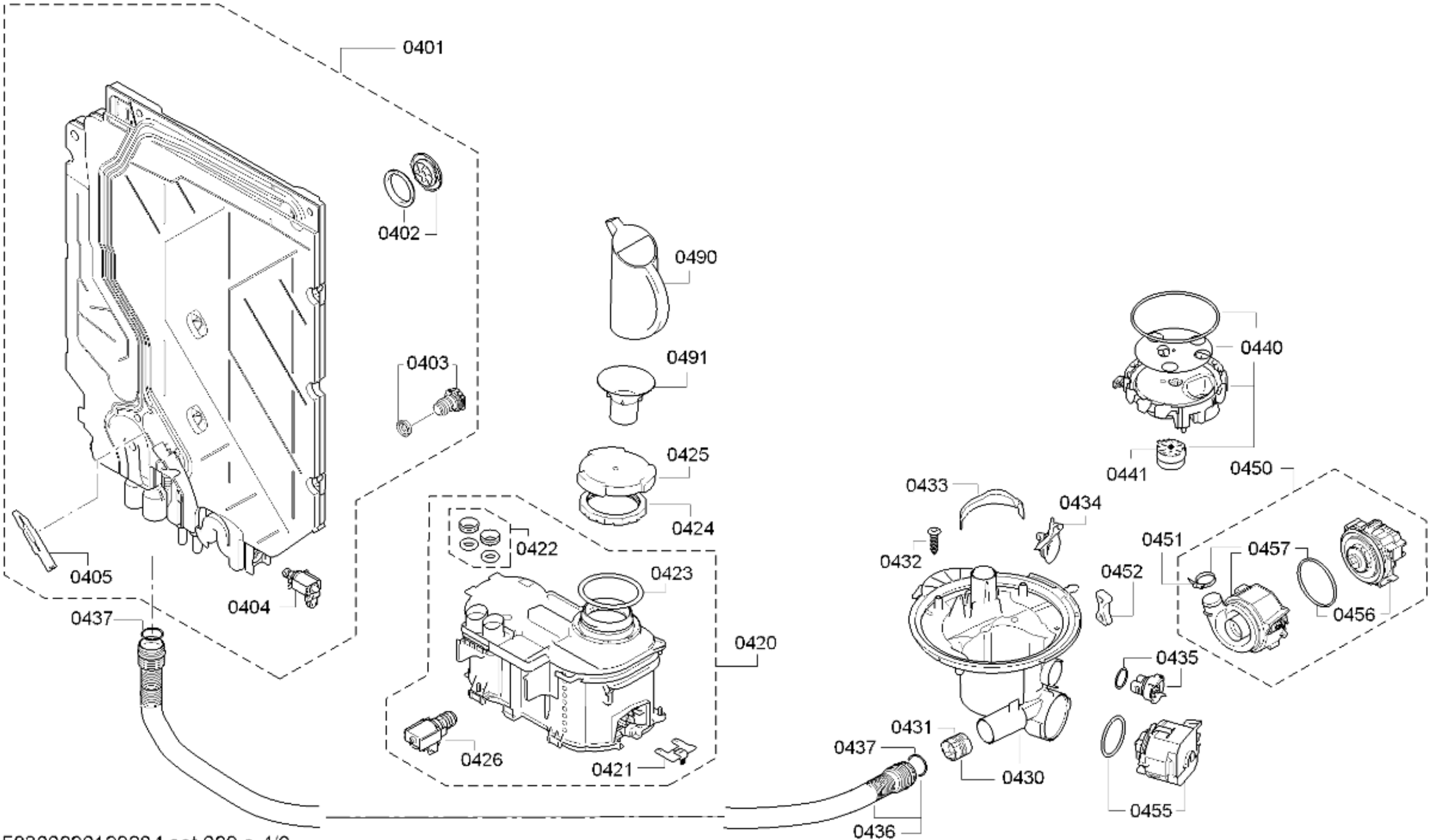

58300000190284 aet 000 a 4/6

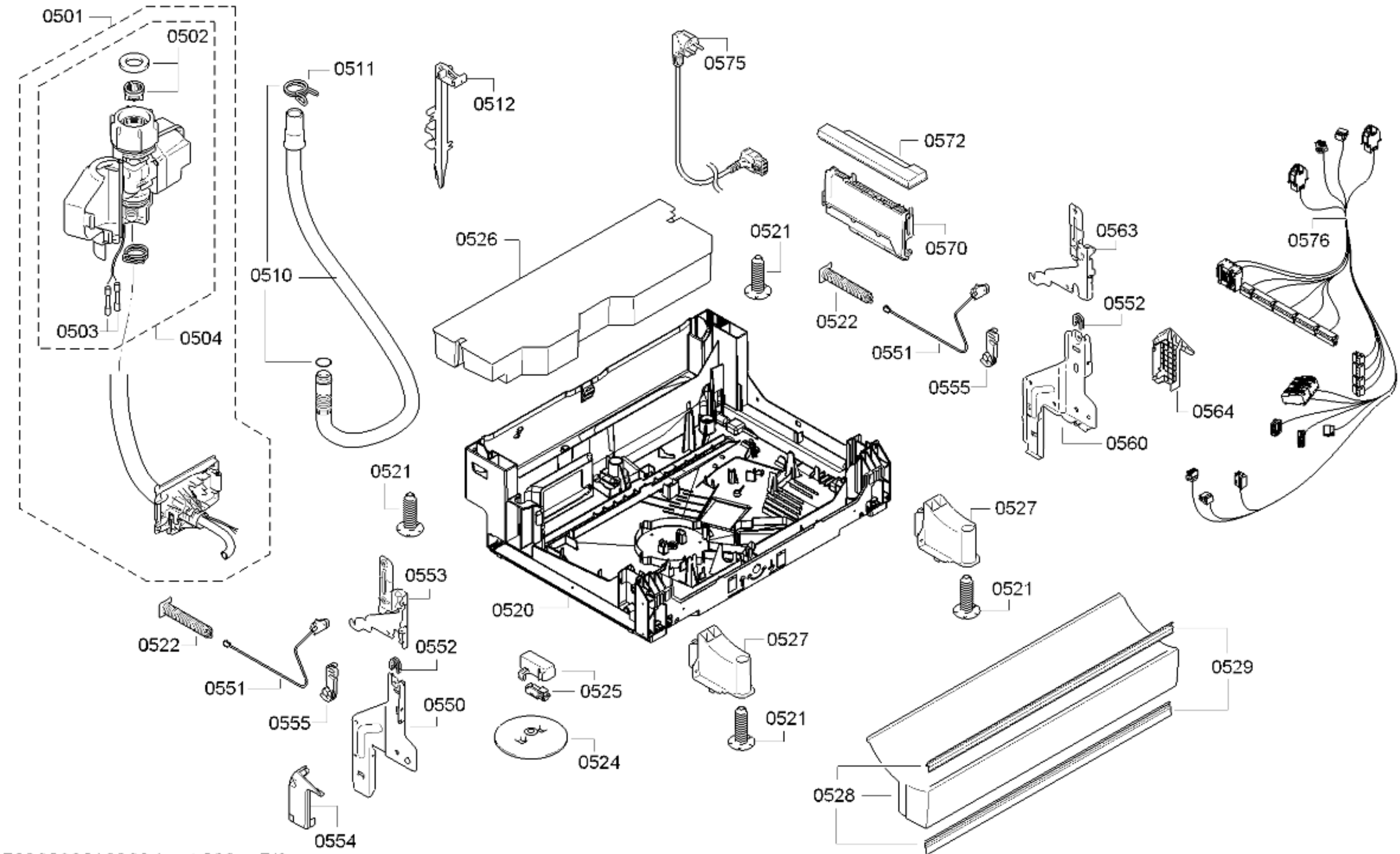

58300000190284 aet 000 a 5/6

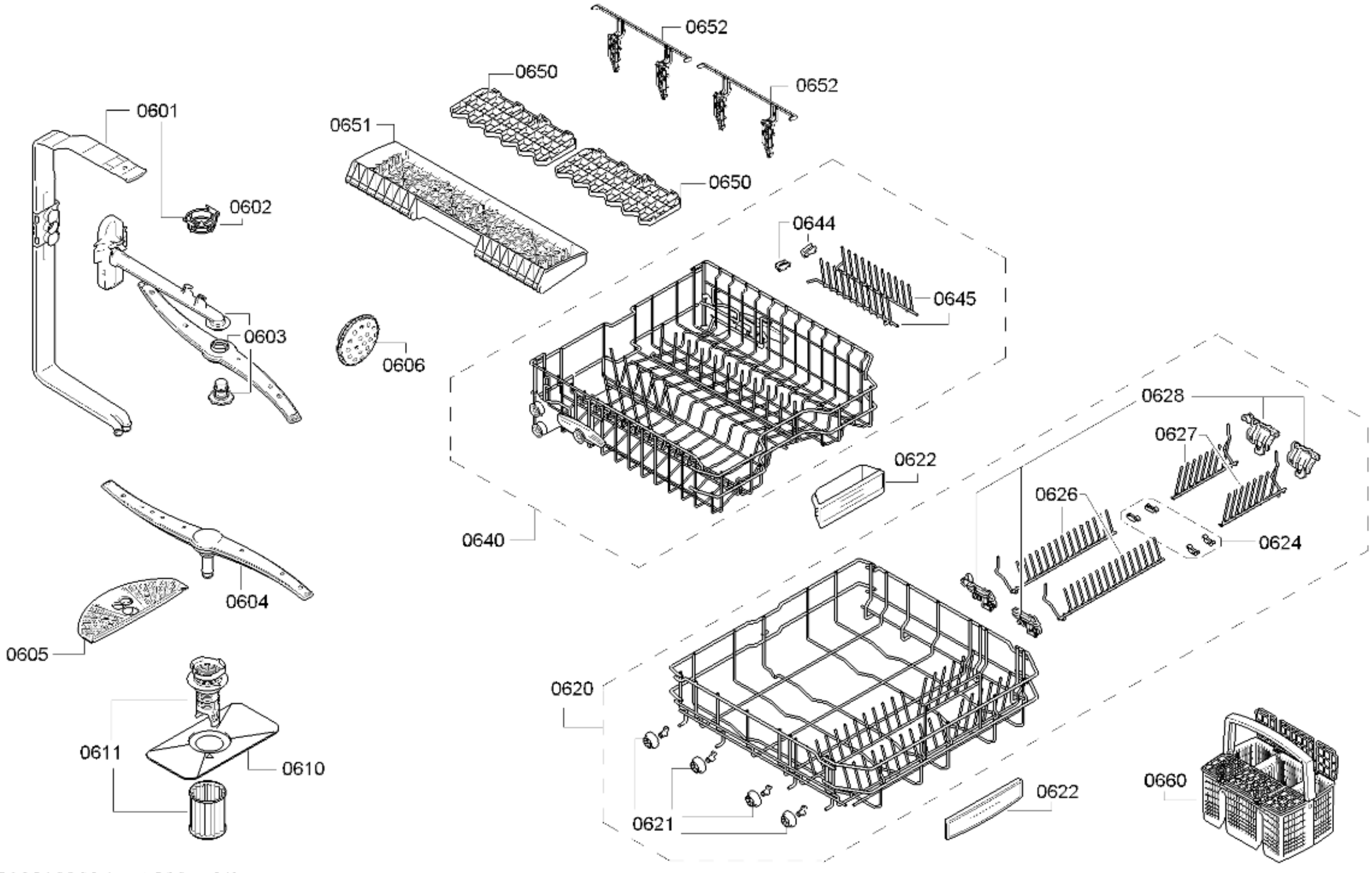

58300000190284 aet 000 a 6/6