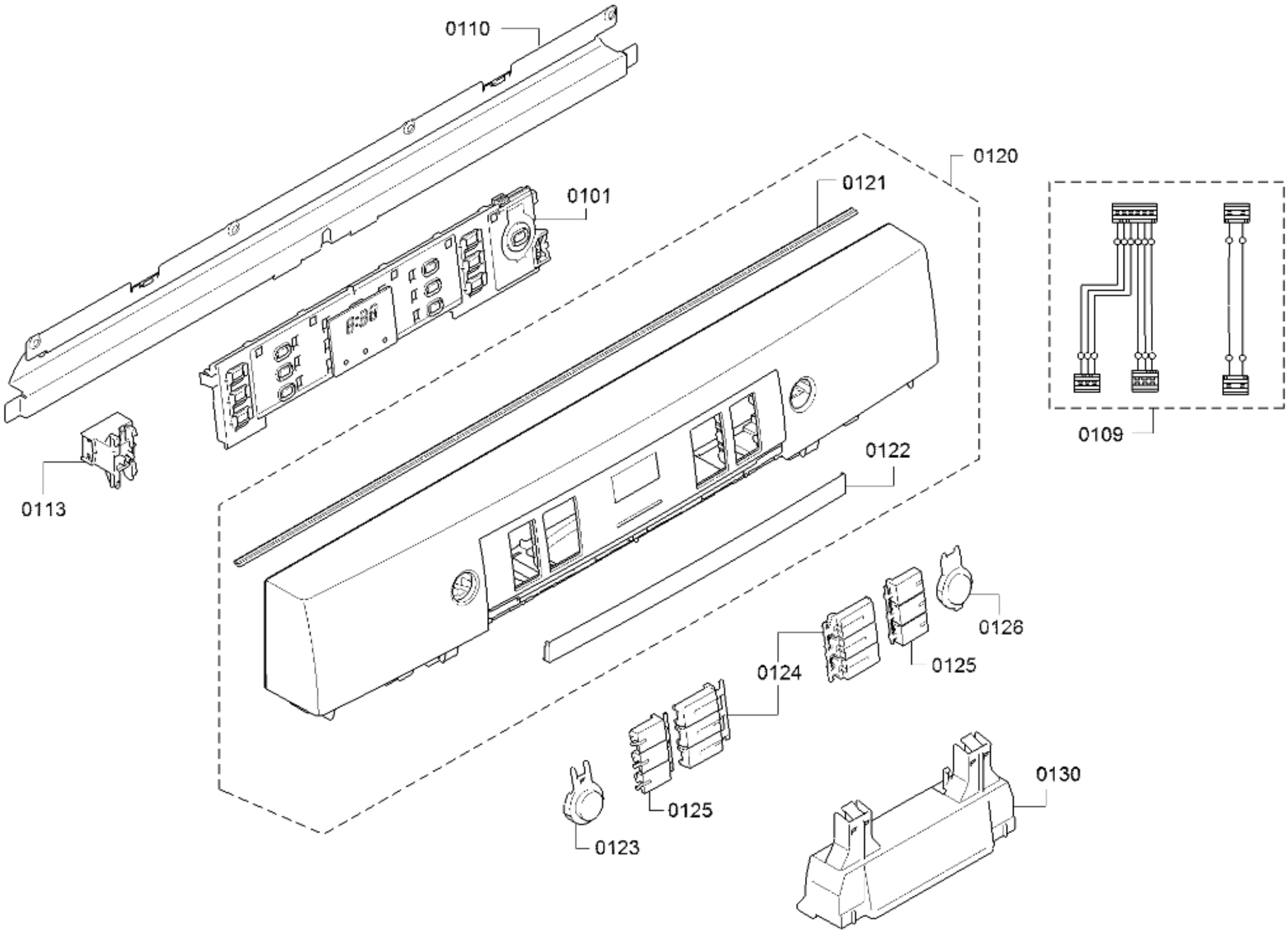
0199
0110
0101
0120
0121
0109
0122
0113
0126
0124
0125
0125
0130
0123

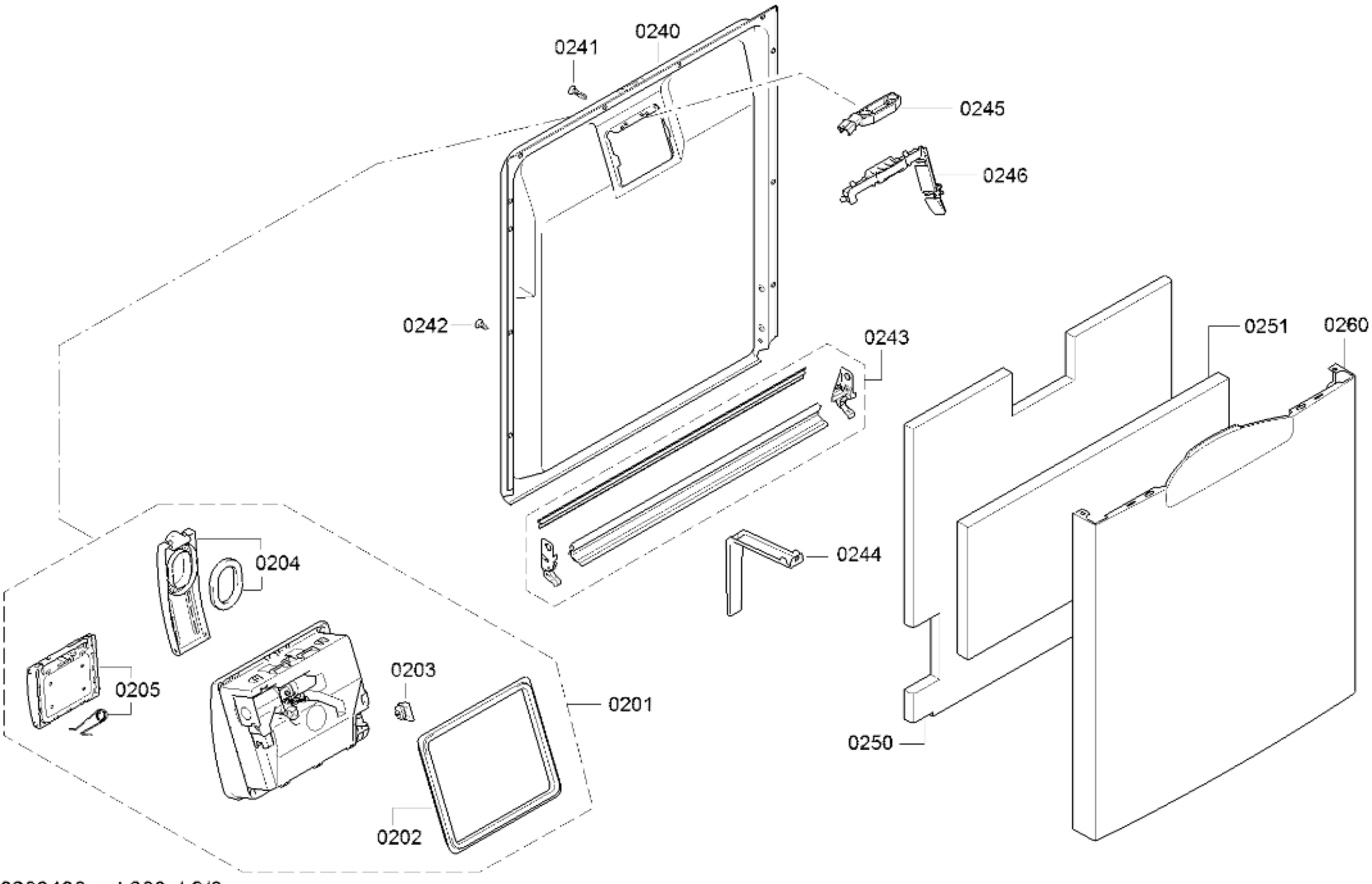

58300000200406 aet 000 d 2/6

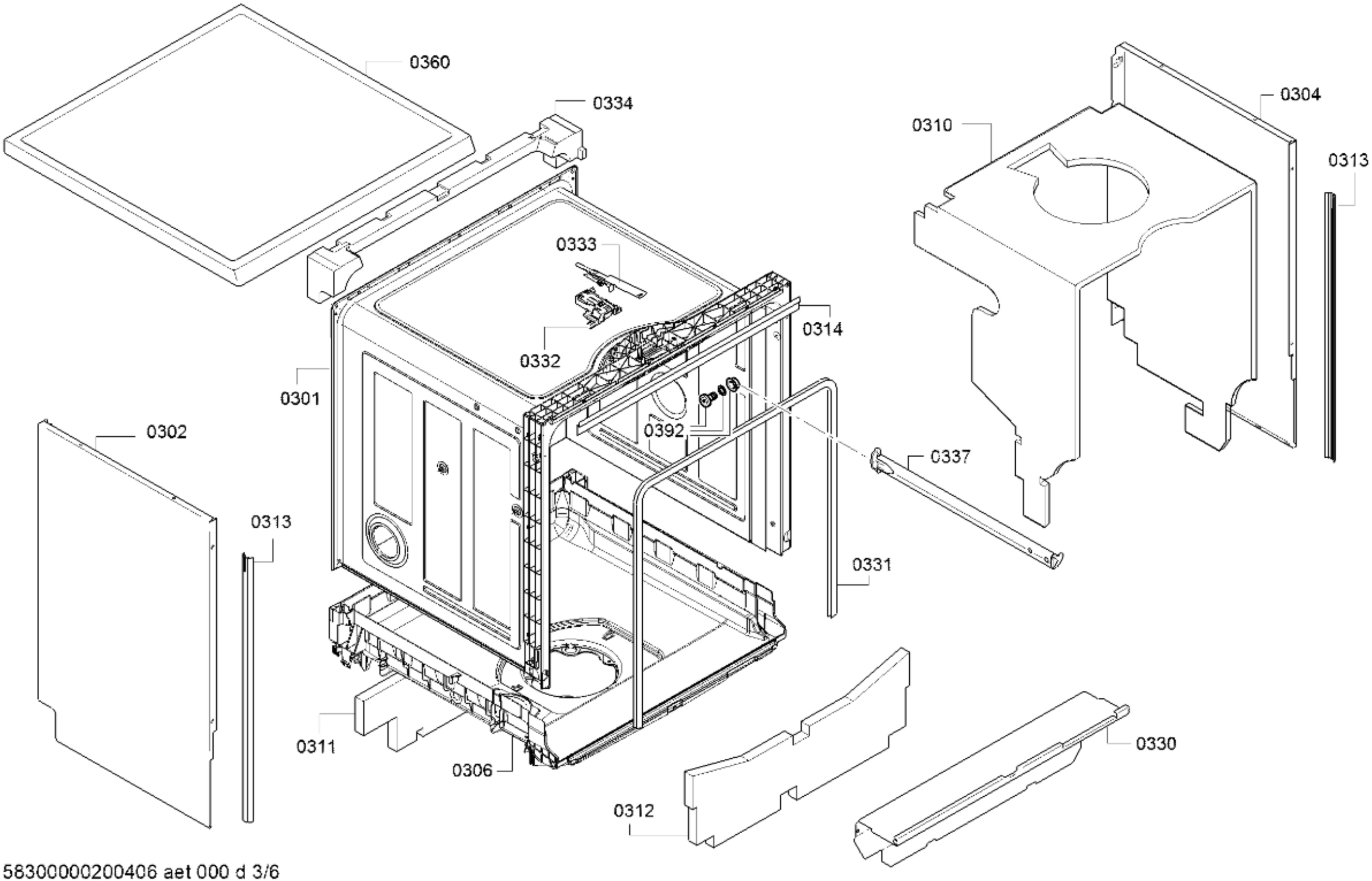

58300000200406 aet 000 d 3/6

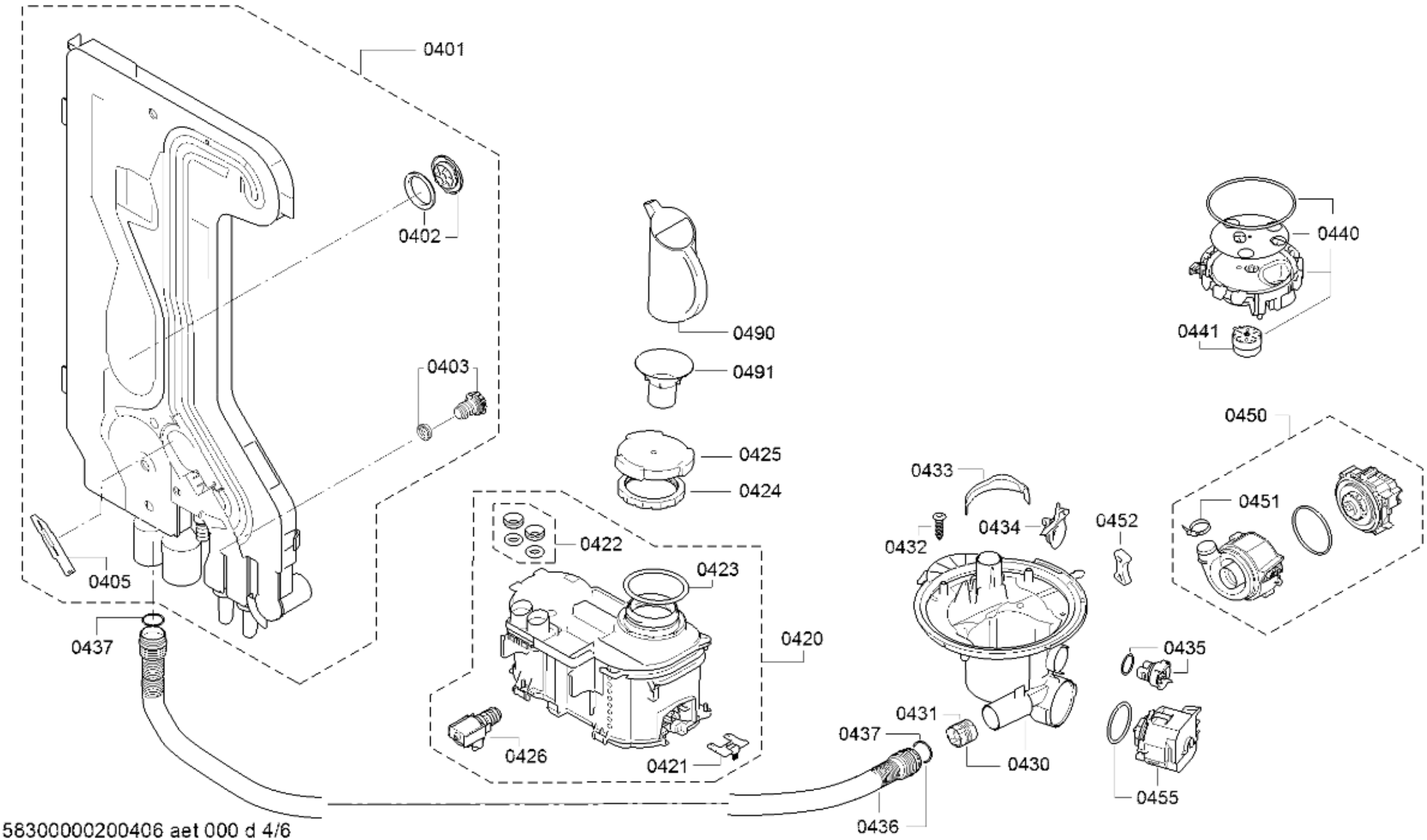

58300000200406 aet 000 d 4/6

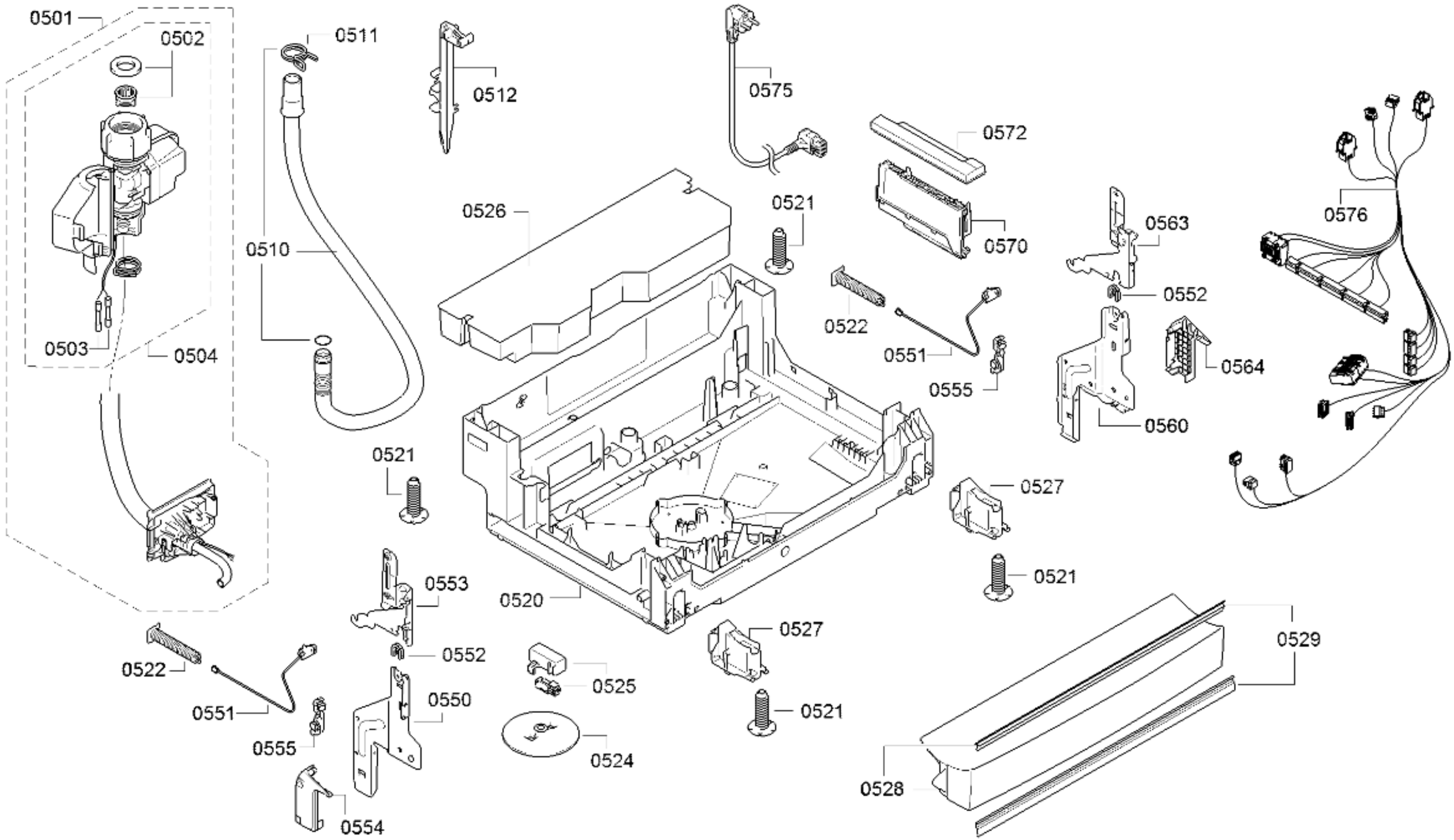

58300000200406 aet 000 d 5/6

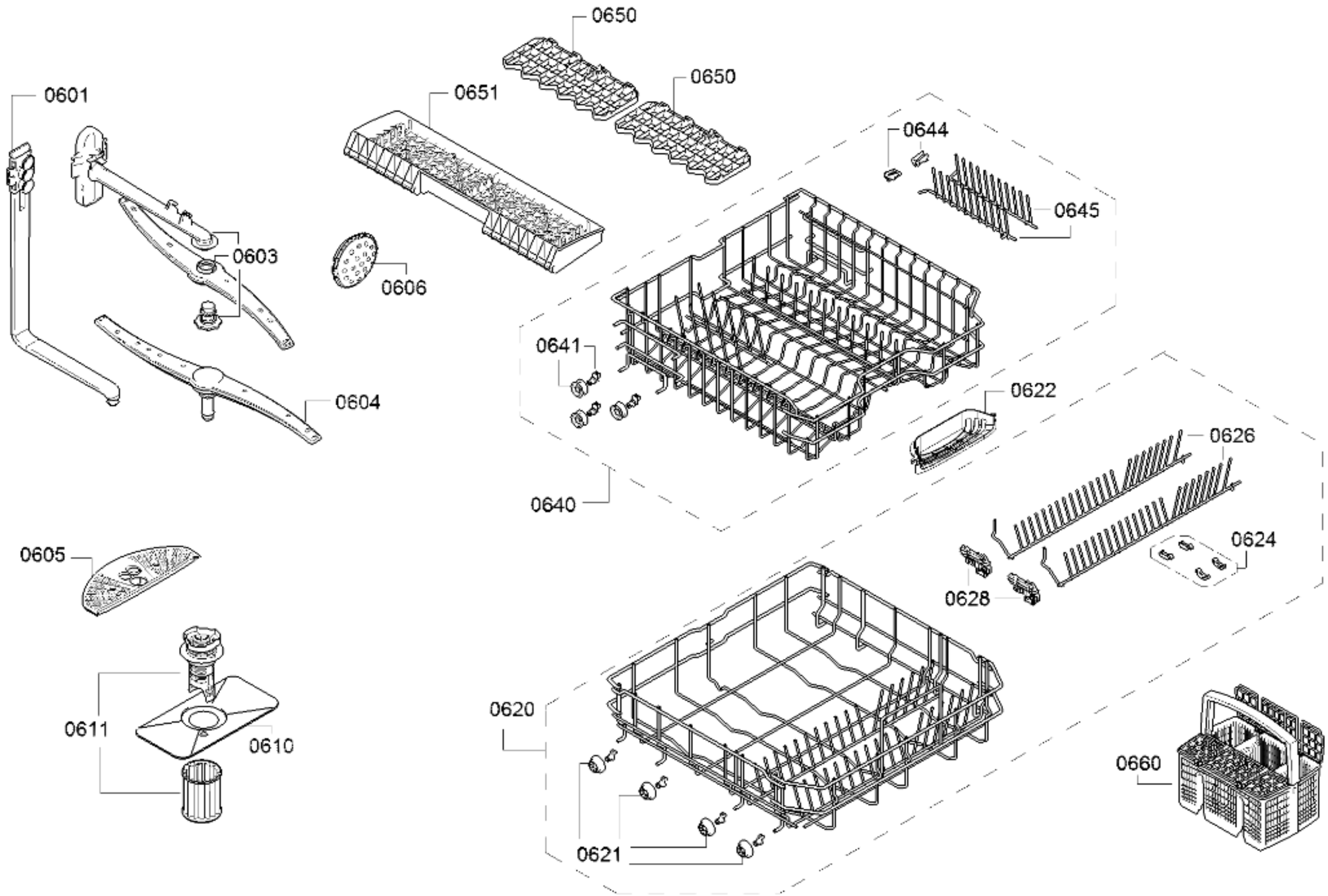

58300000200406 aet 000 d 6/6