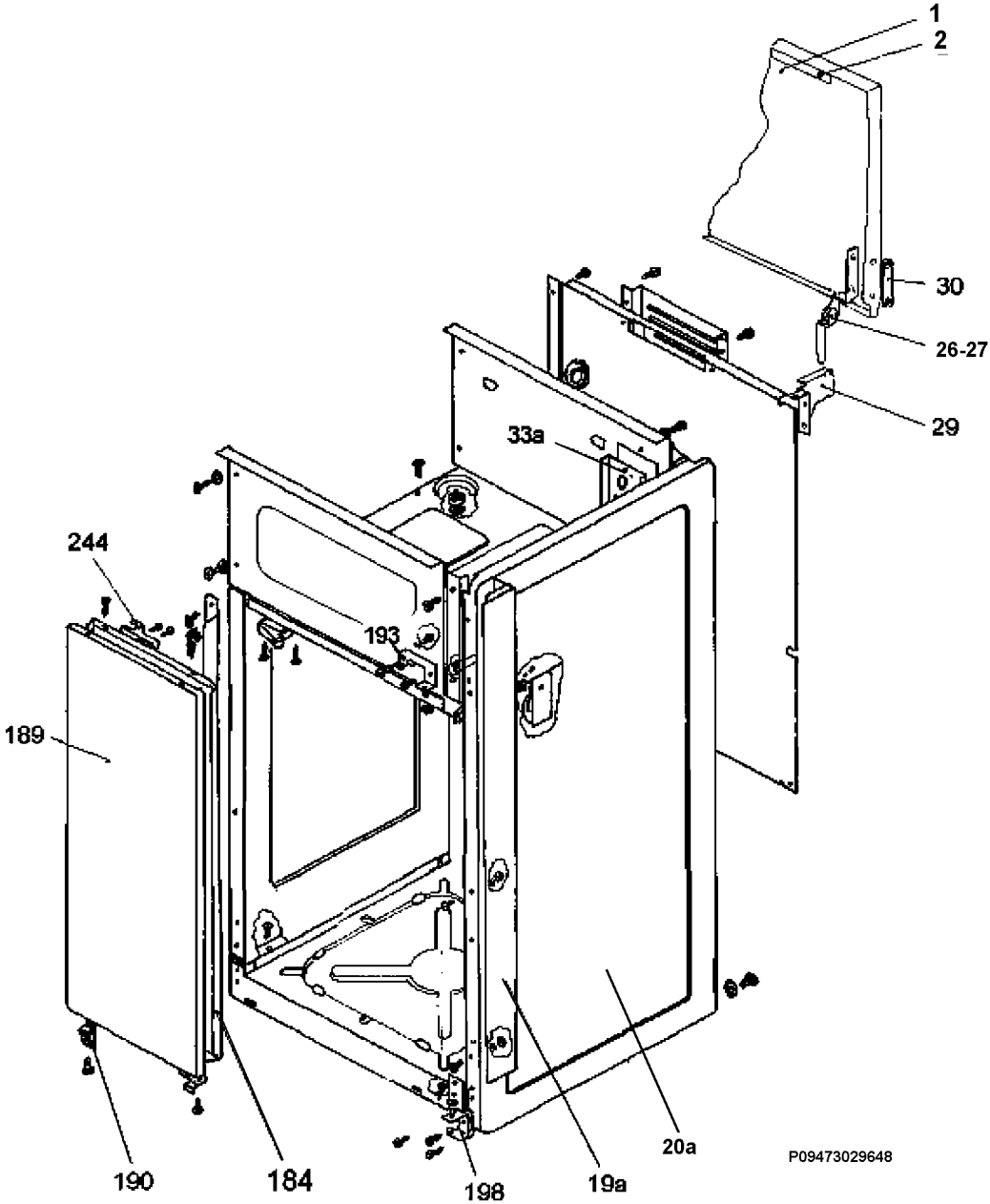
1
2
30
26-27
29
33a
244
193
189
190
184
198
19a
20a
P09473029648