A

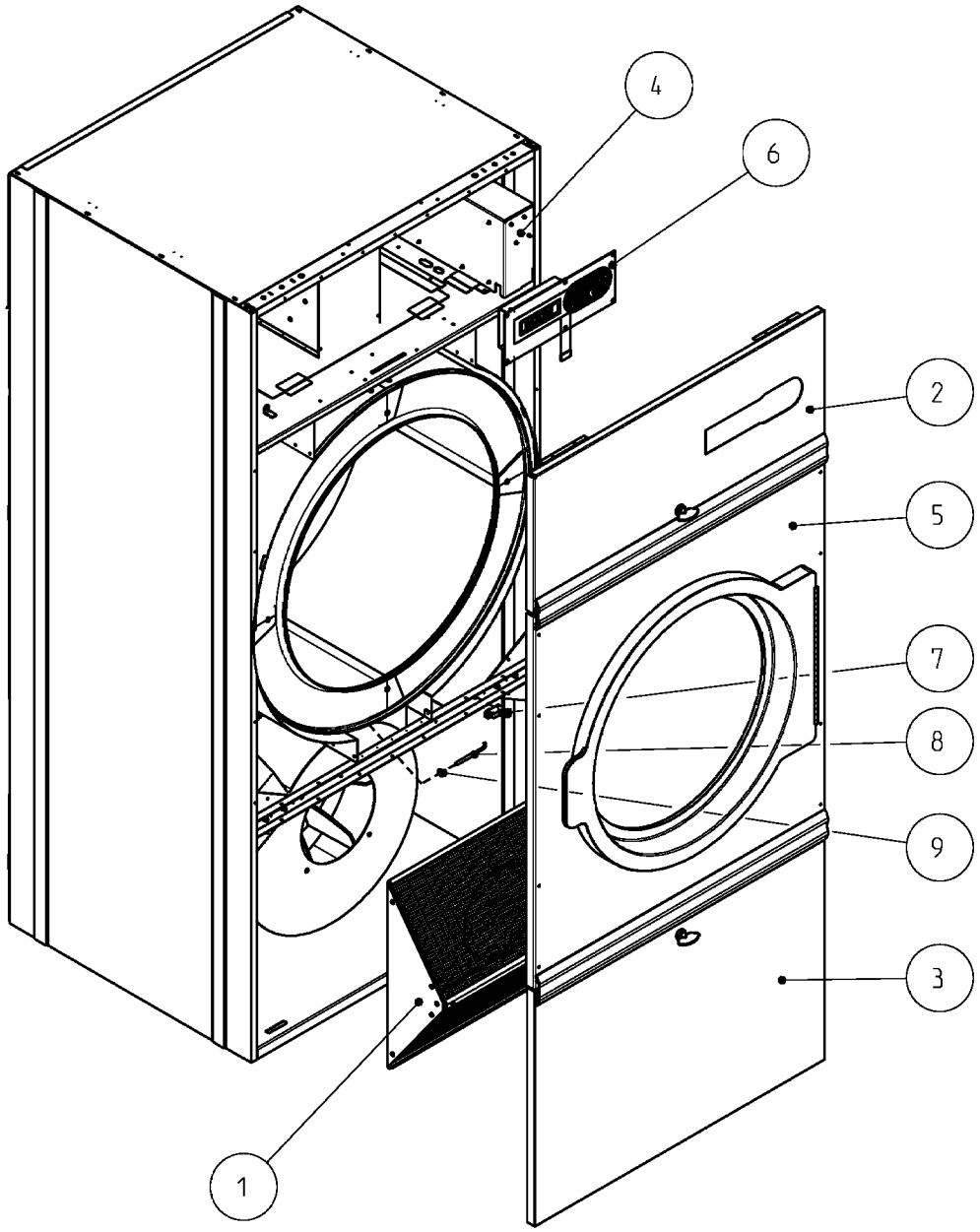

1050213 X