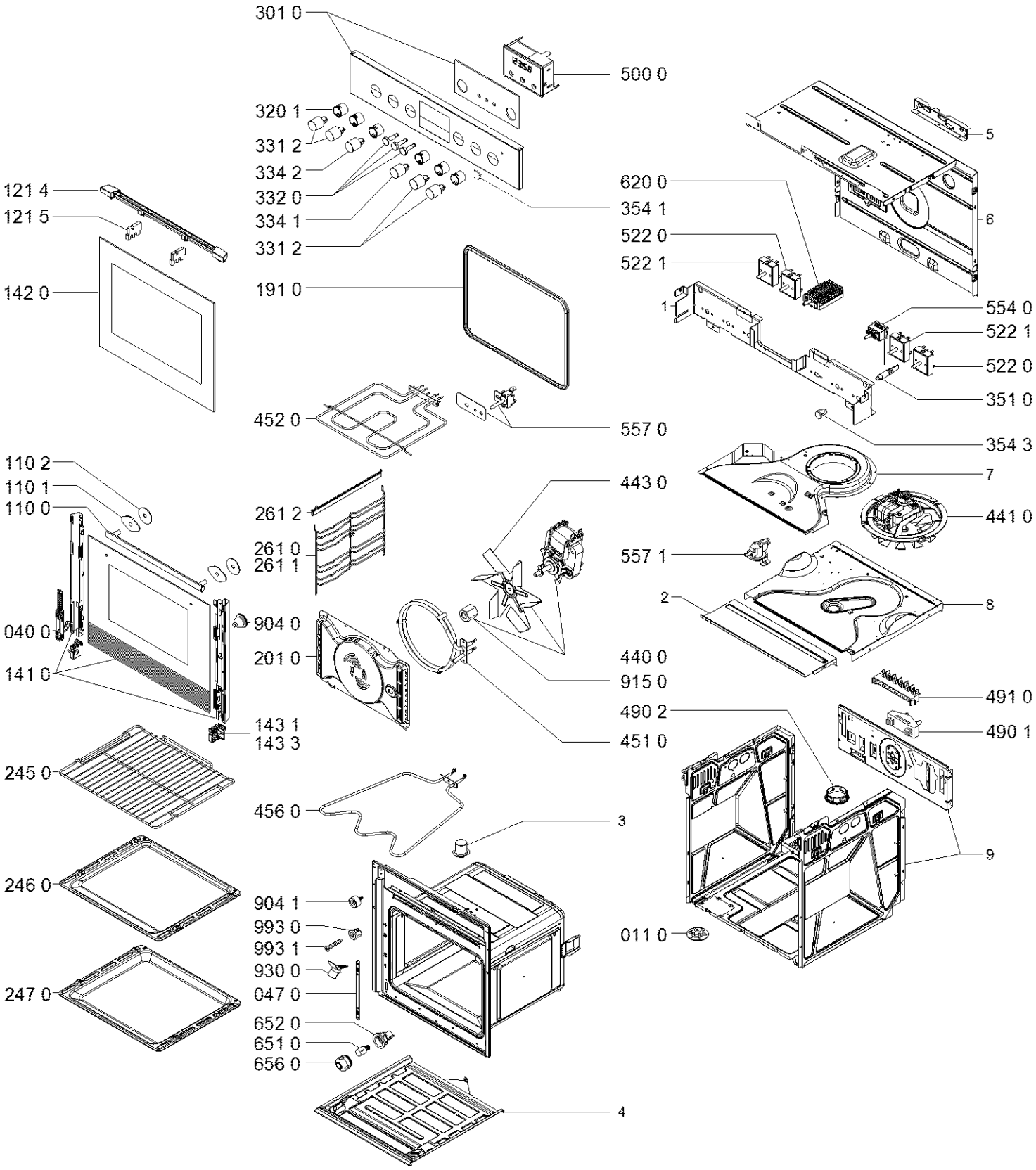

4000 104 92432