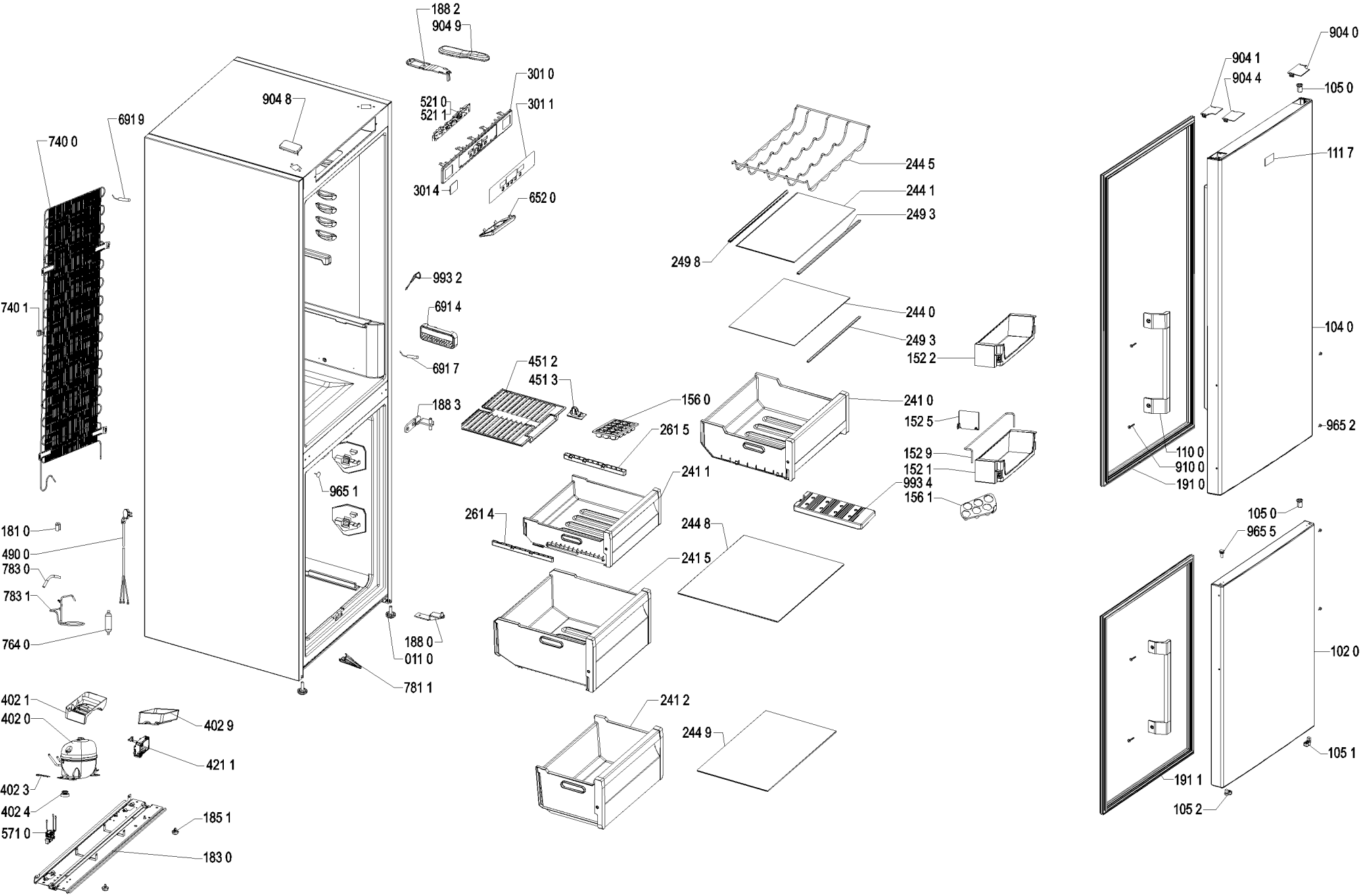

4000 108 30771