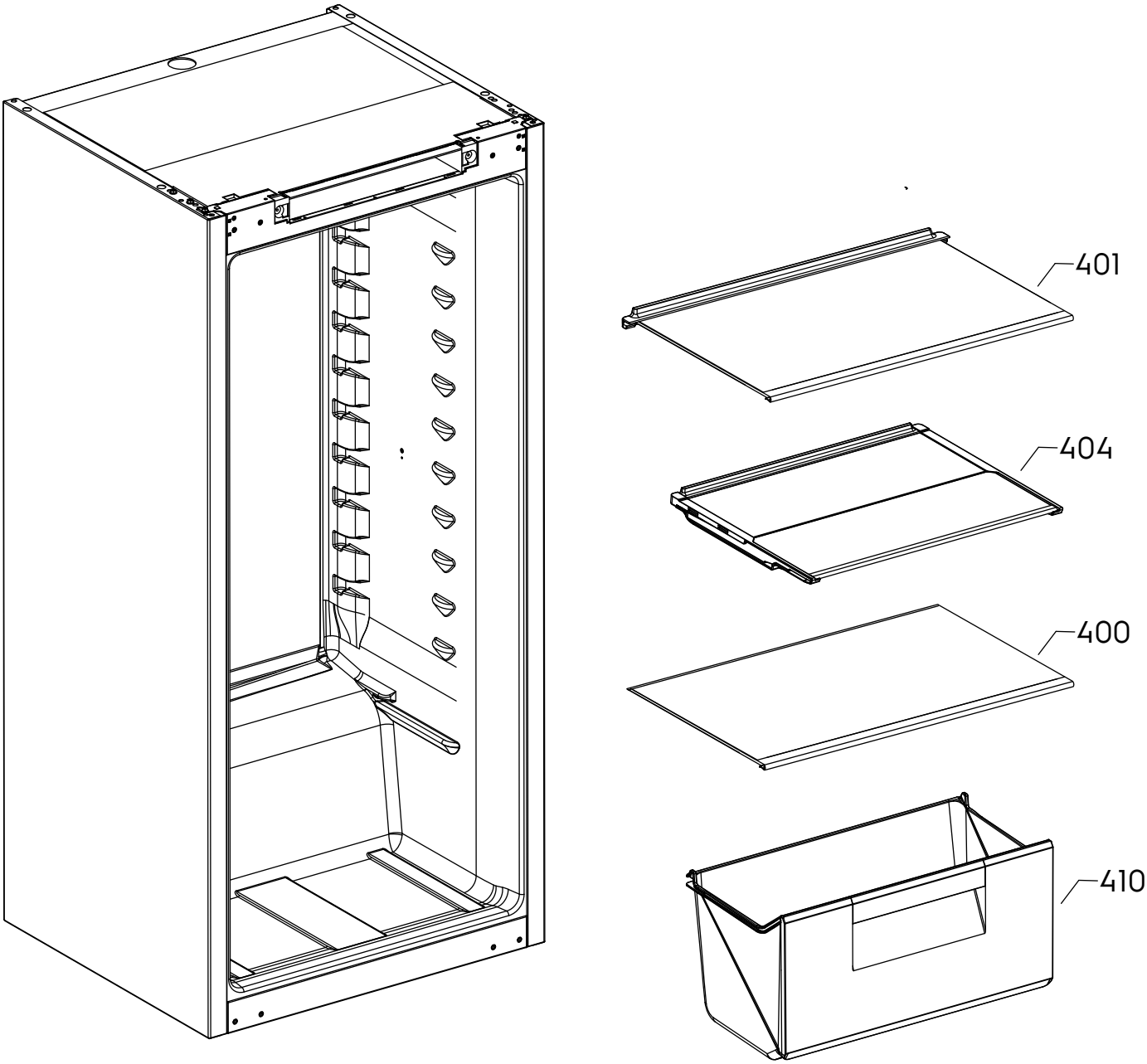

P09233071084