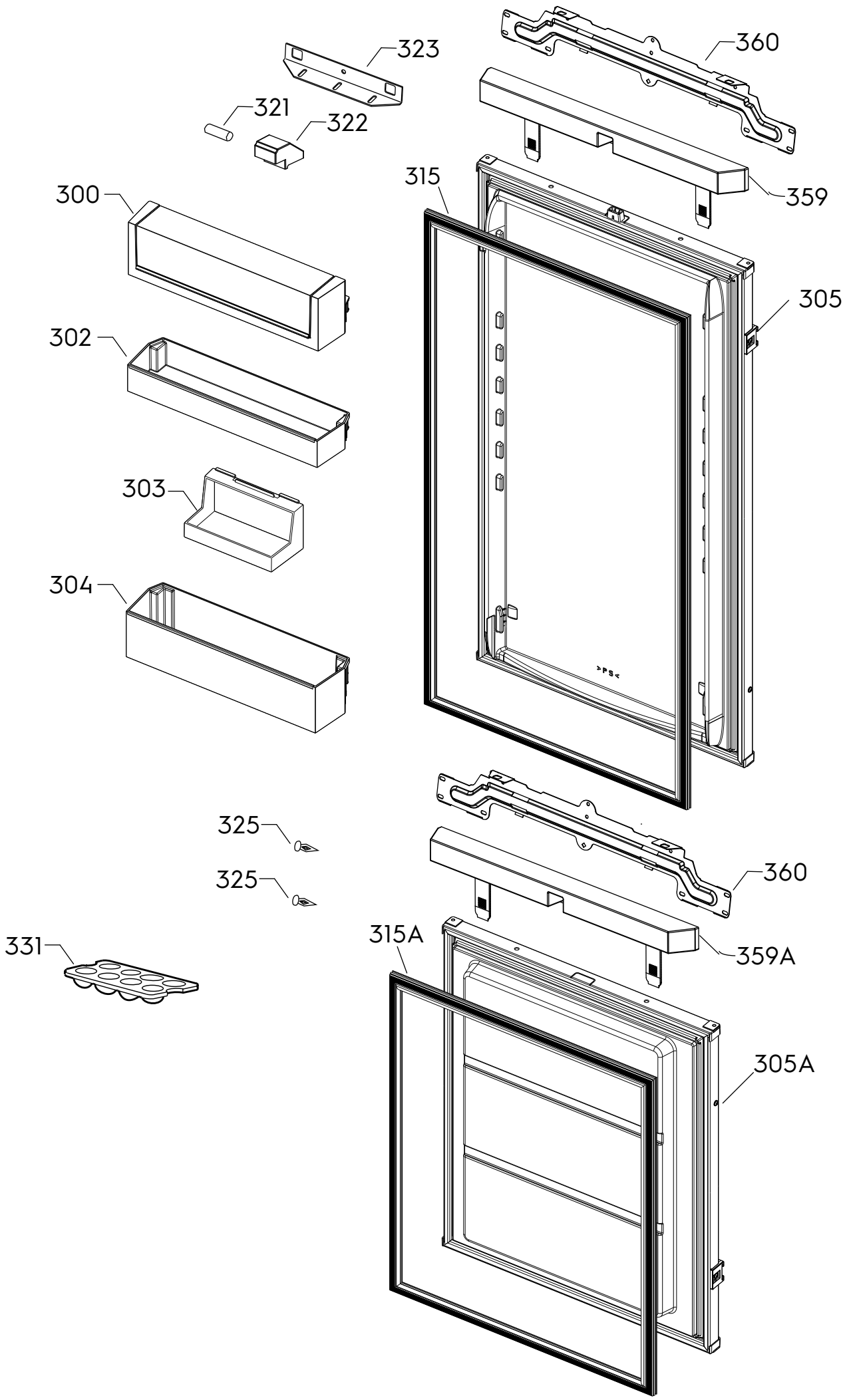

P09253105294