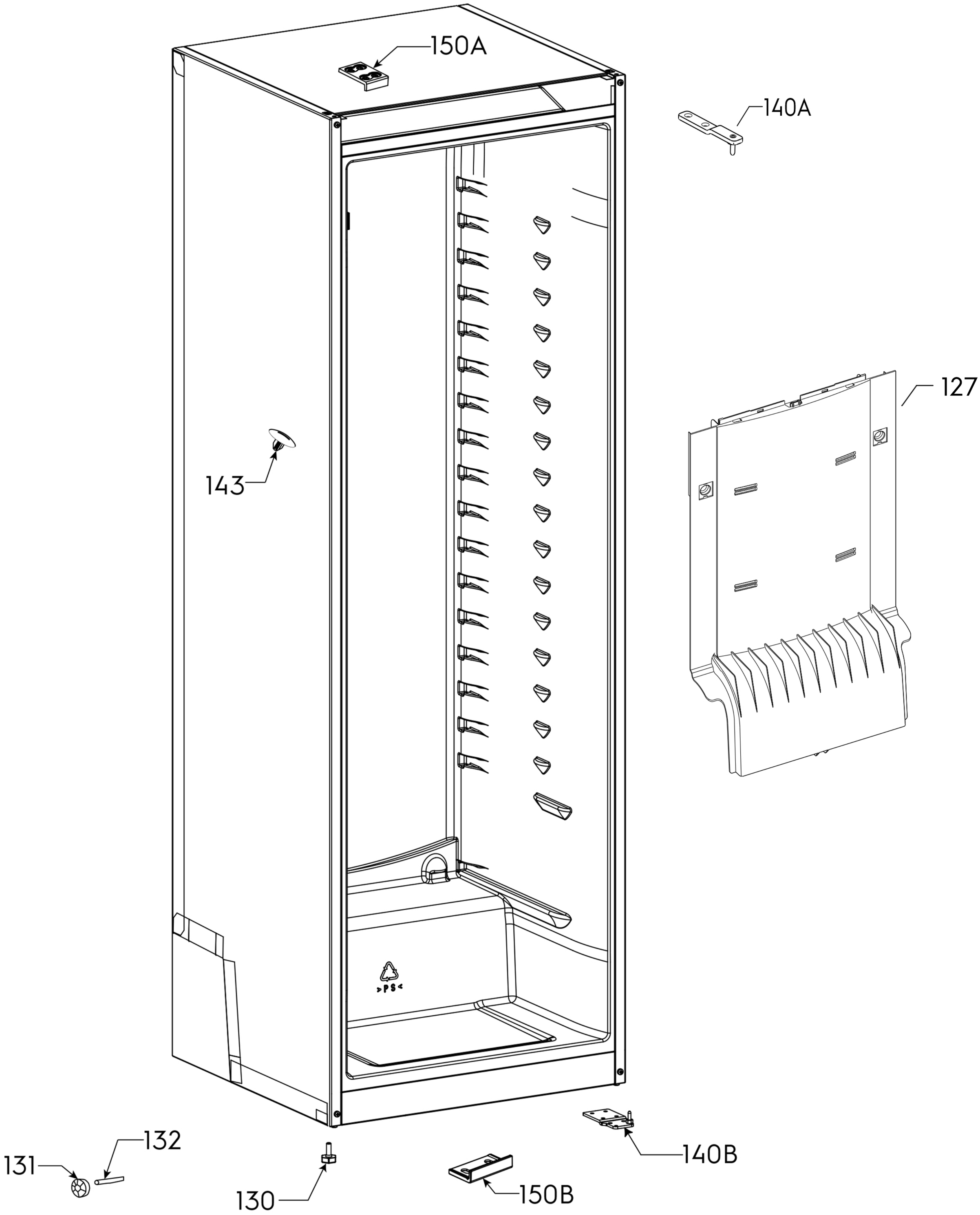

P09223023990