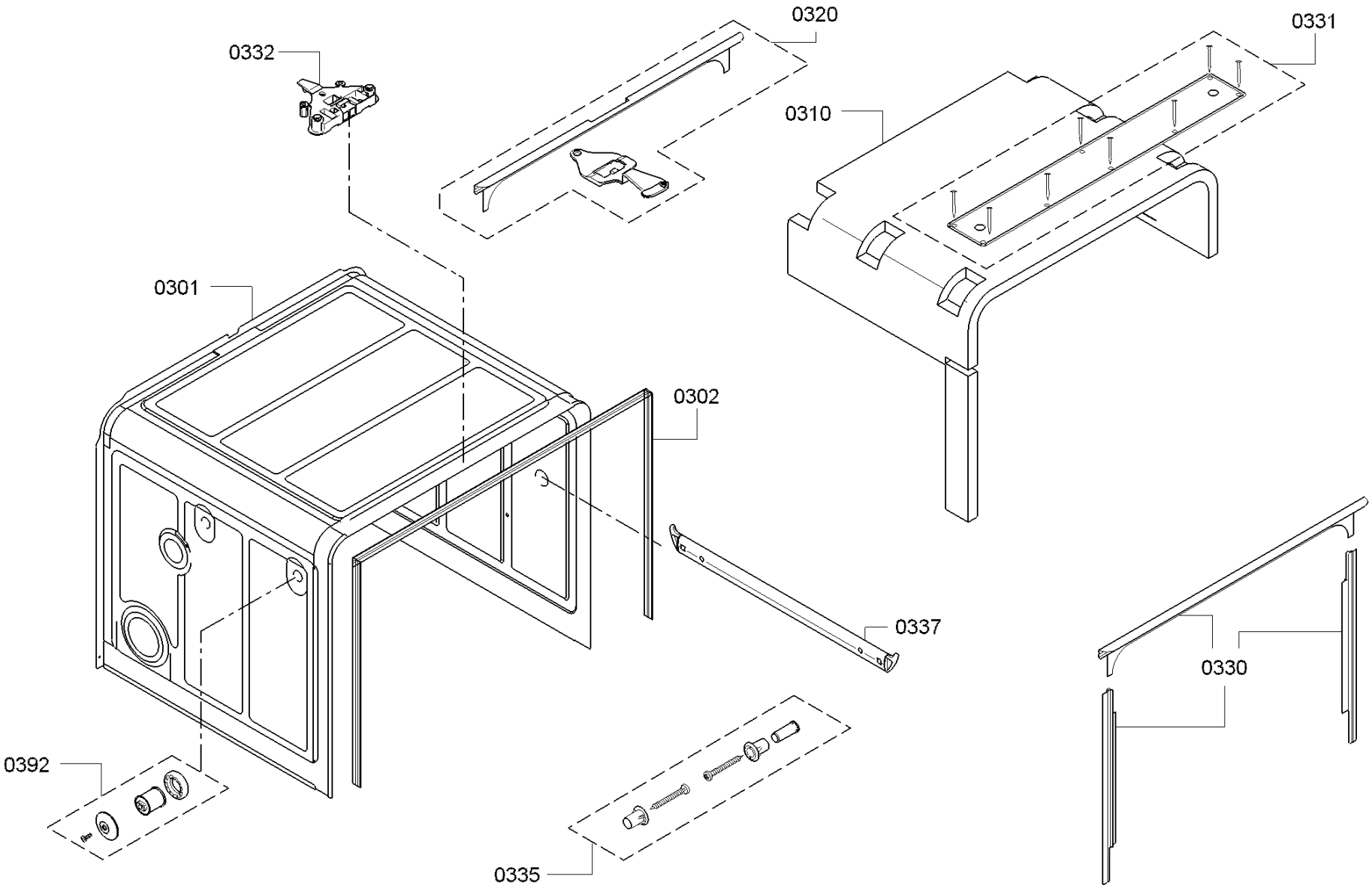

58300000192432 aet 003 a