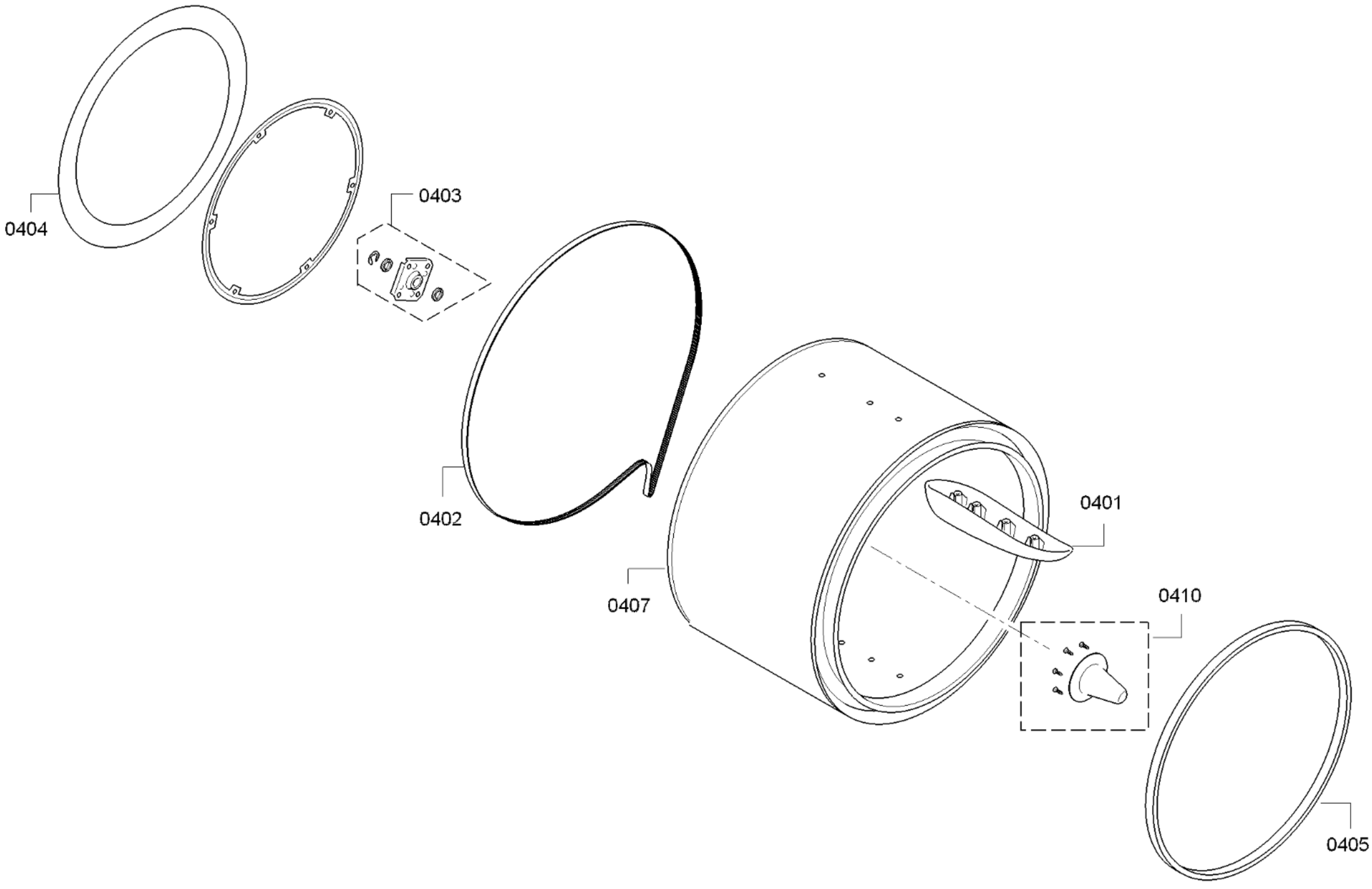

58300000190510 aet 004 a

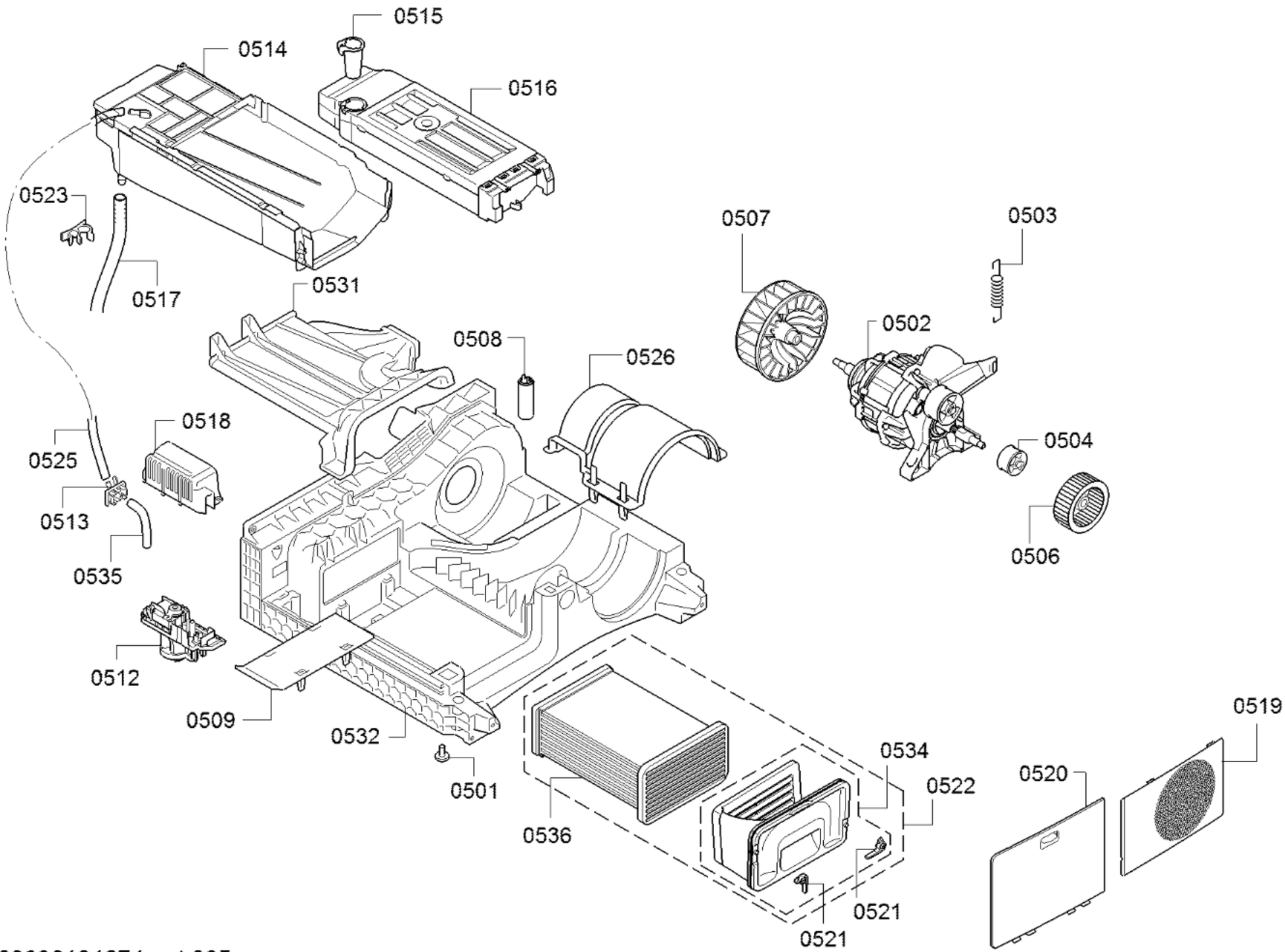

58300000194874 aet 005 a

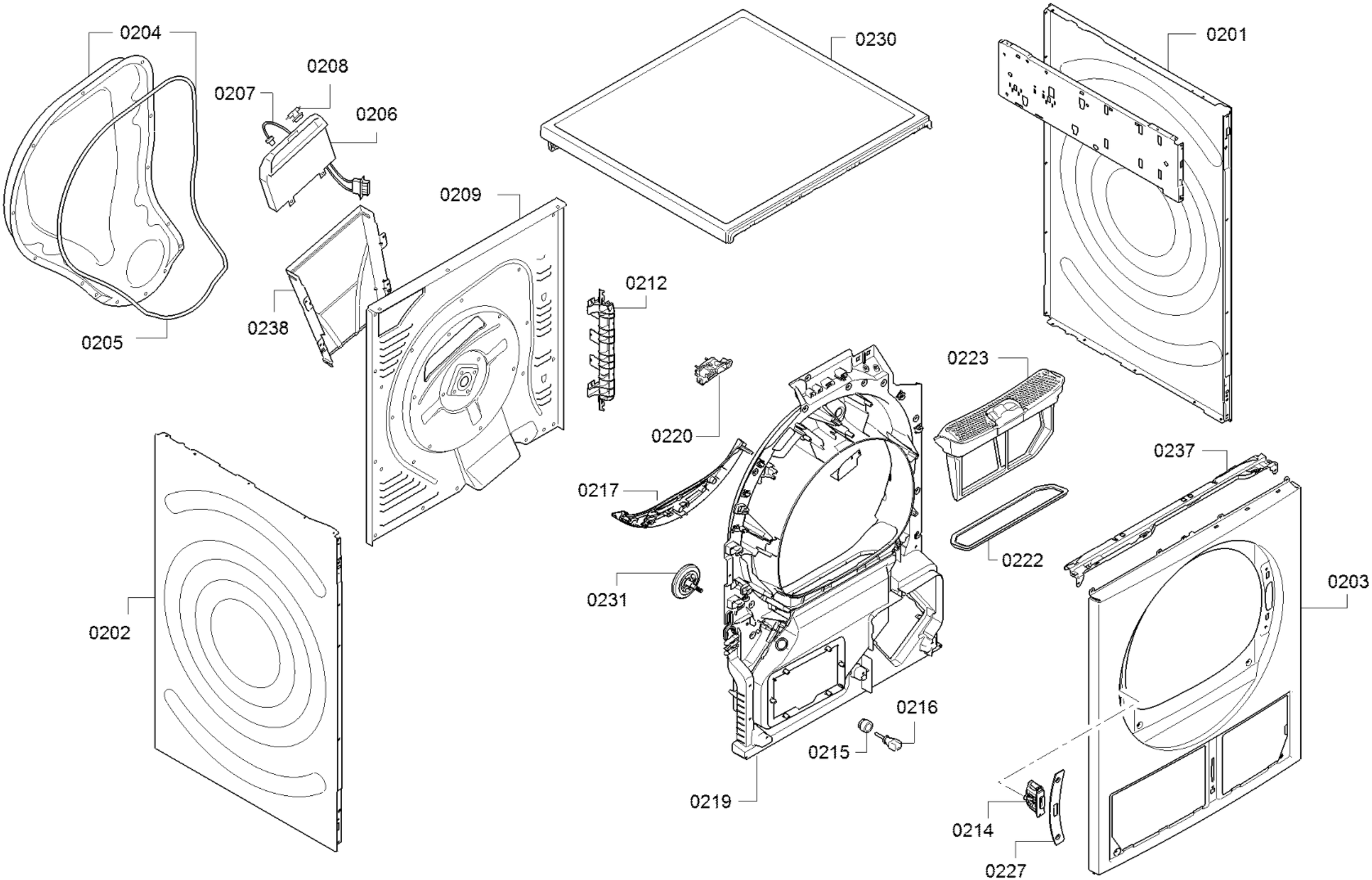

58300000194950 aet 002 b

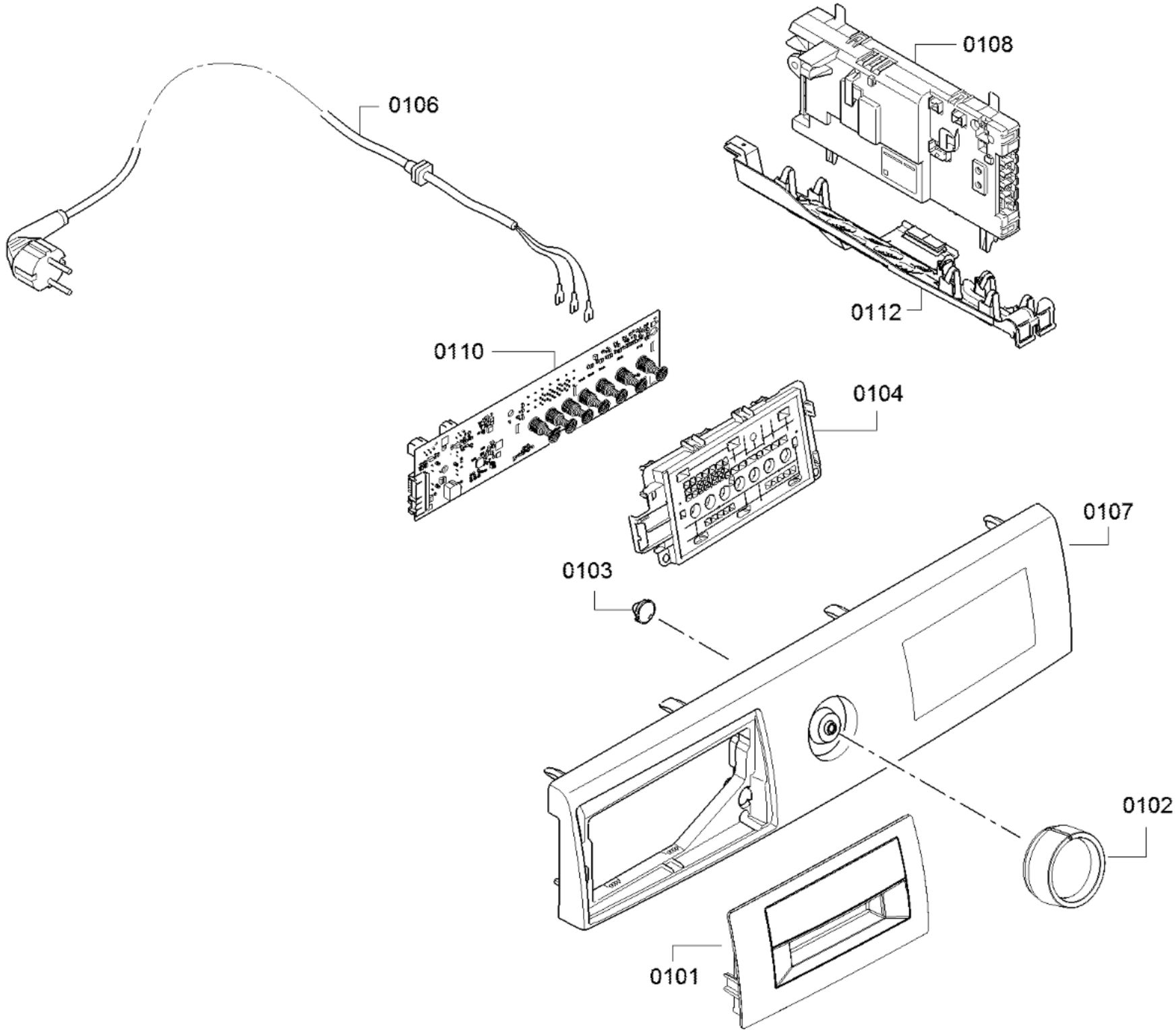

0199

58300000195933 aet 001 a

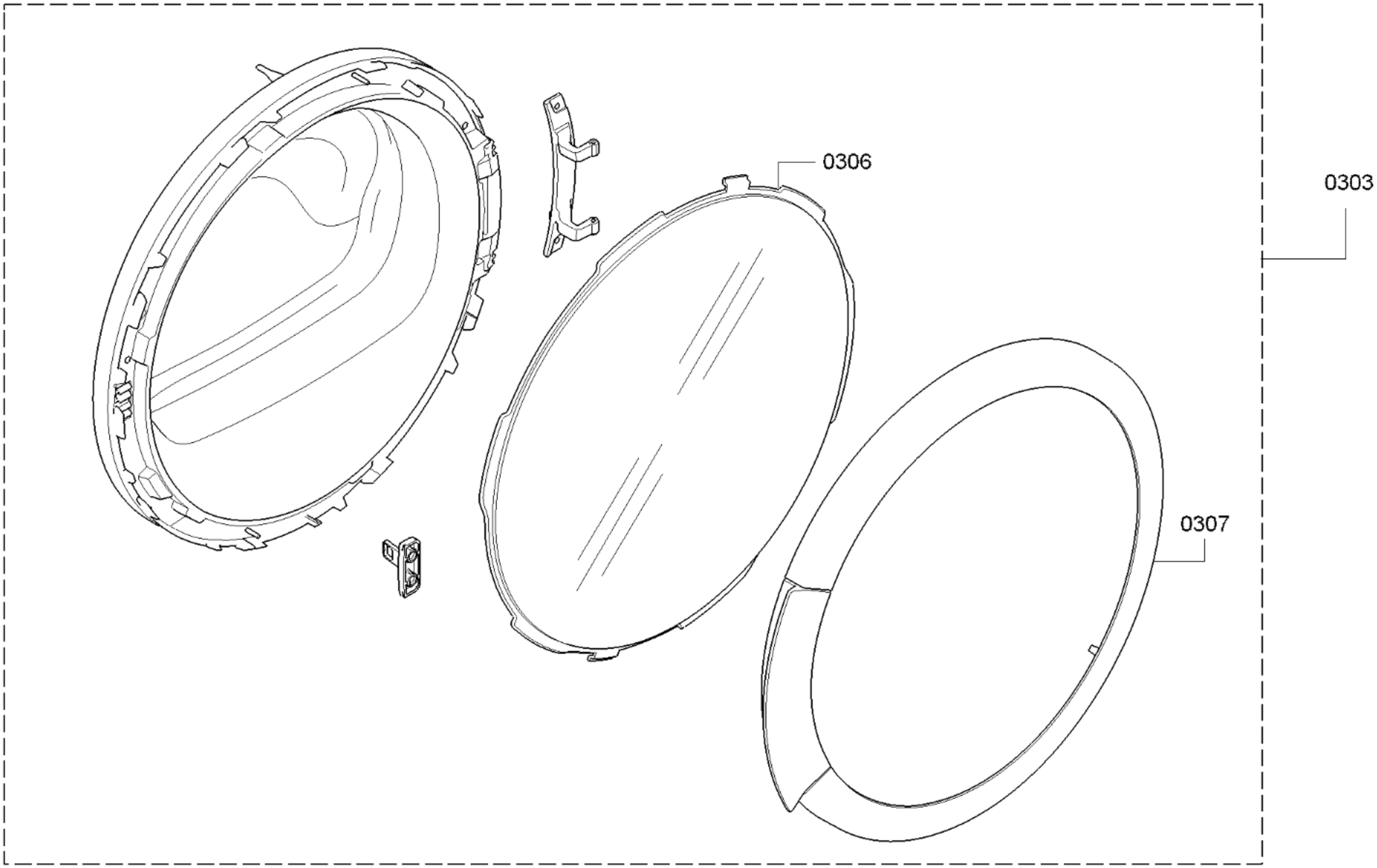

58300000192680 aet 003 a

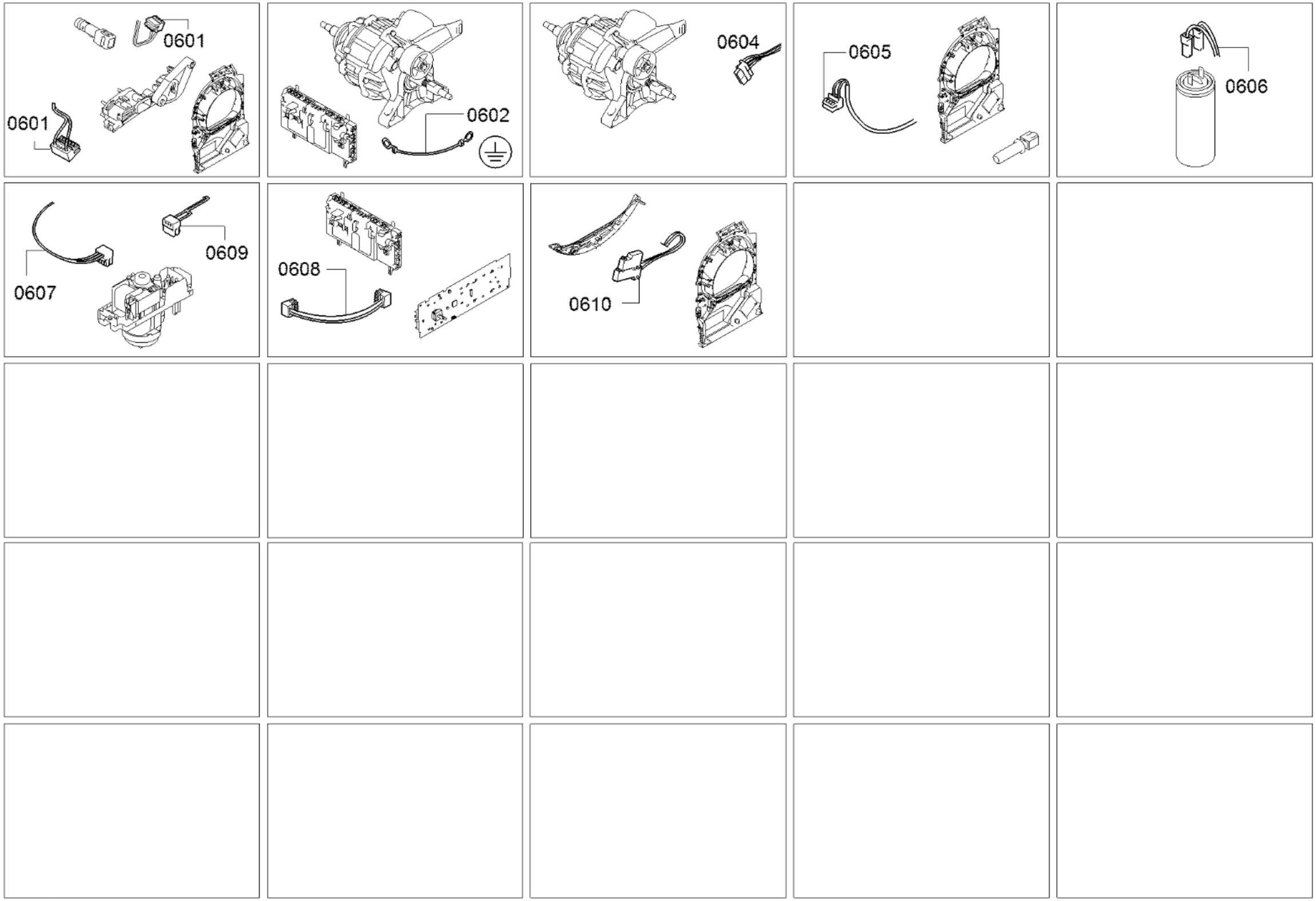

58300000194254 aet 006 a