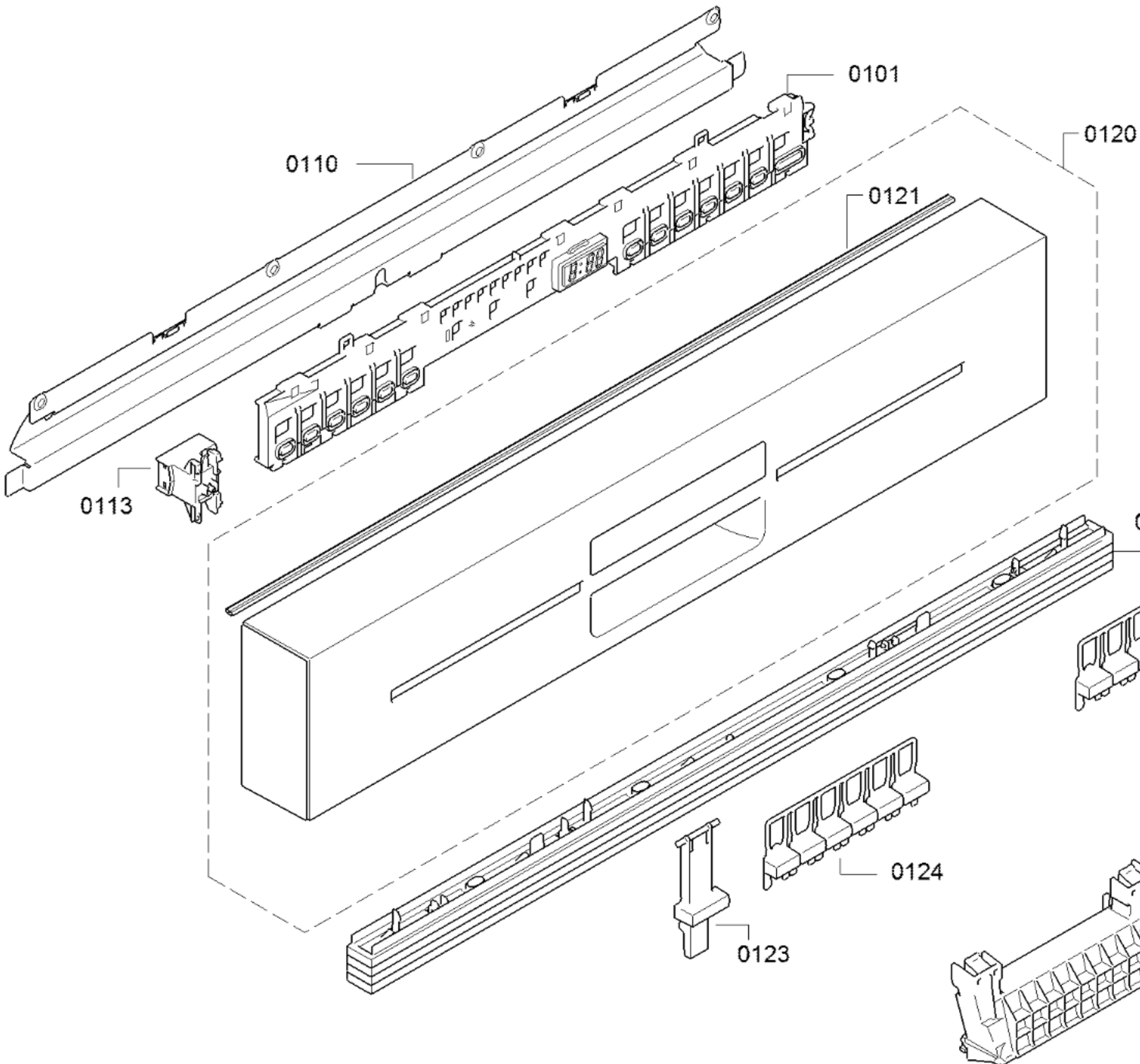
0101
0110
0120
0121
0113
0129
0125
0124
0123
0130

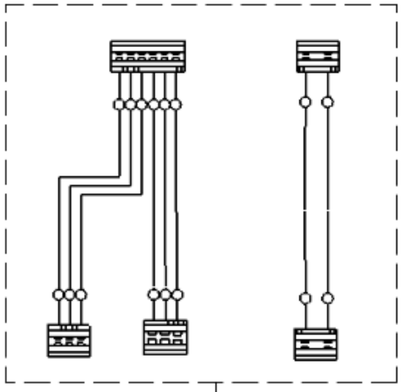
0109

0199

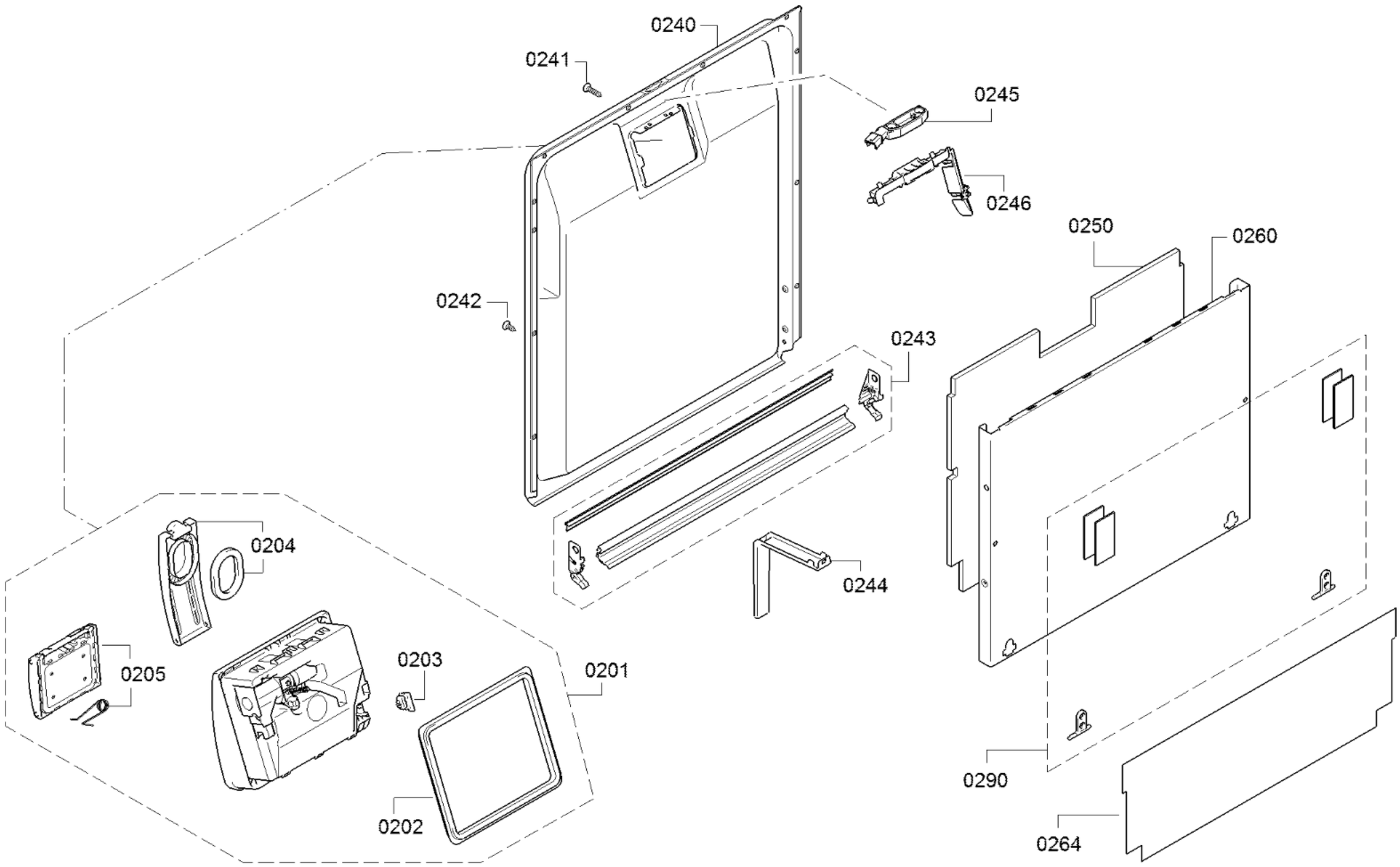


58300000182076 aet 000 b 2/6

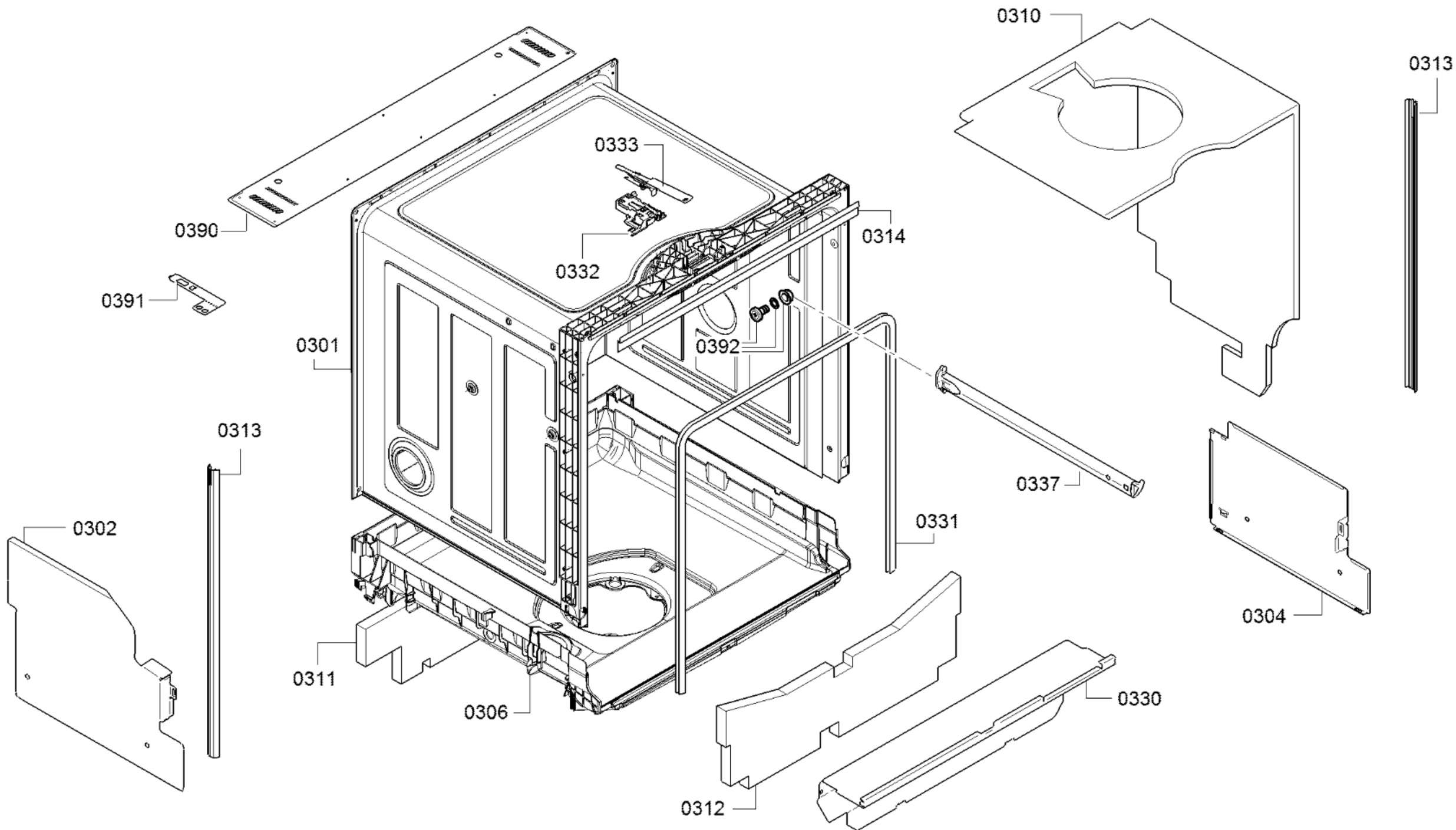


58300000182076 aet 000 b 3/6

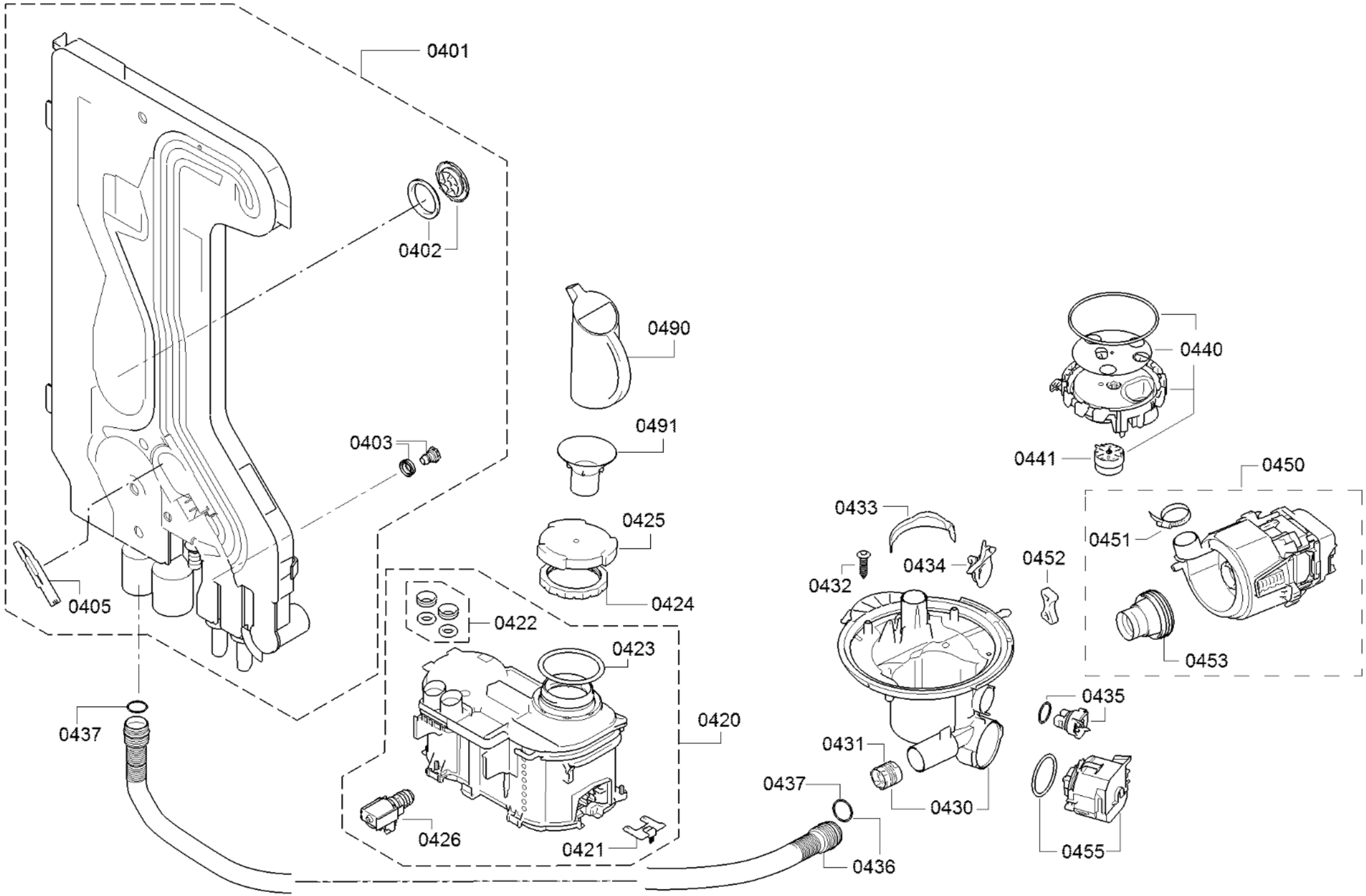


58300000182076 aet 000 b 4/6

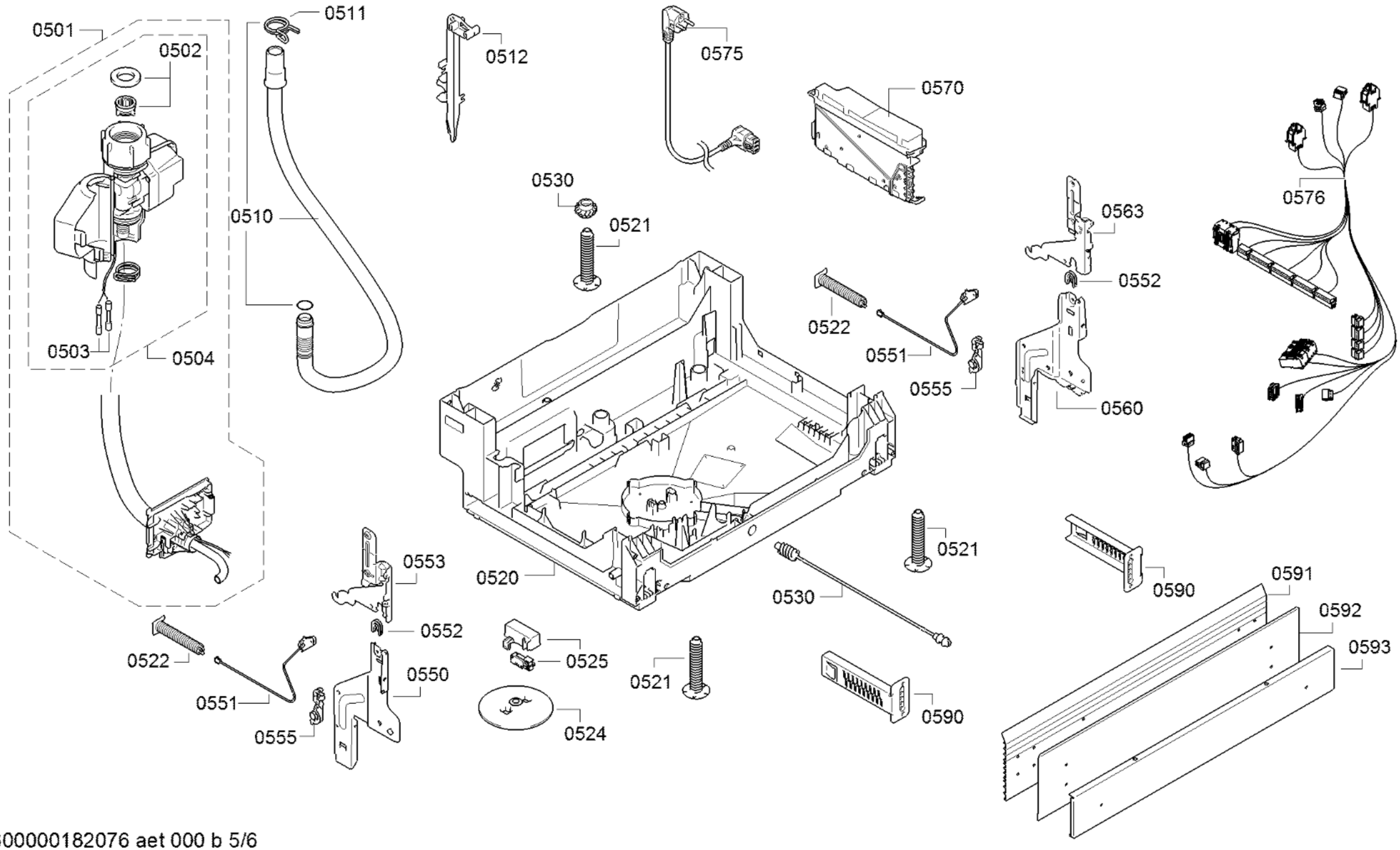


58300000182076 aet 000 b 5/6

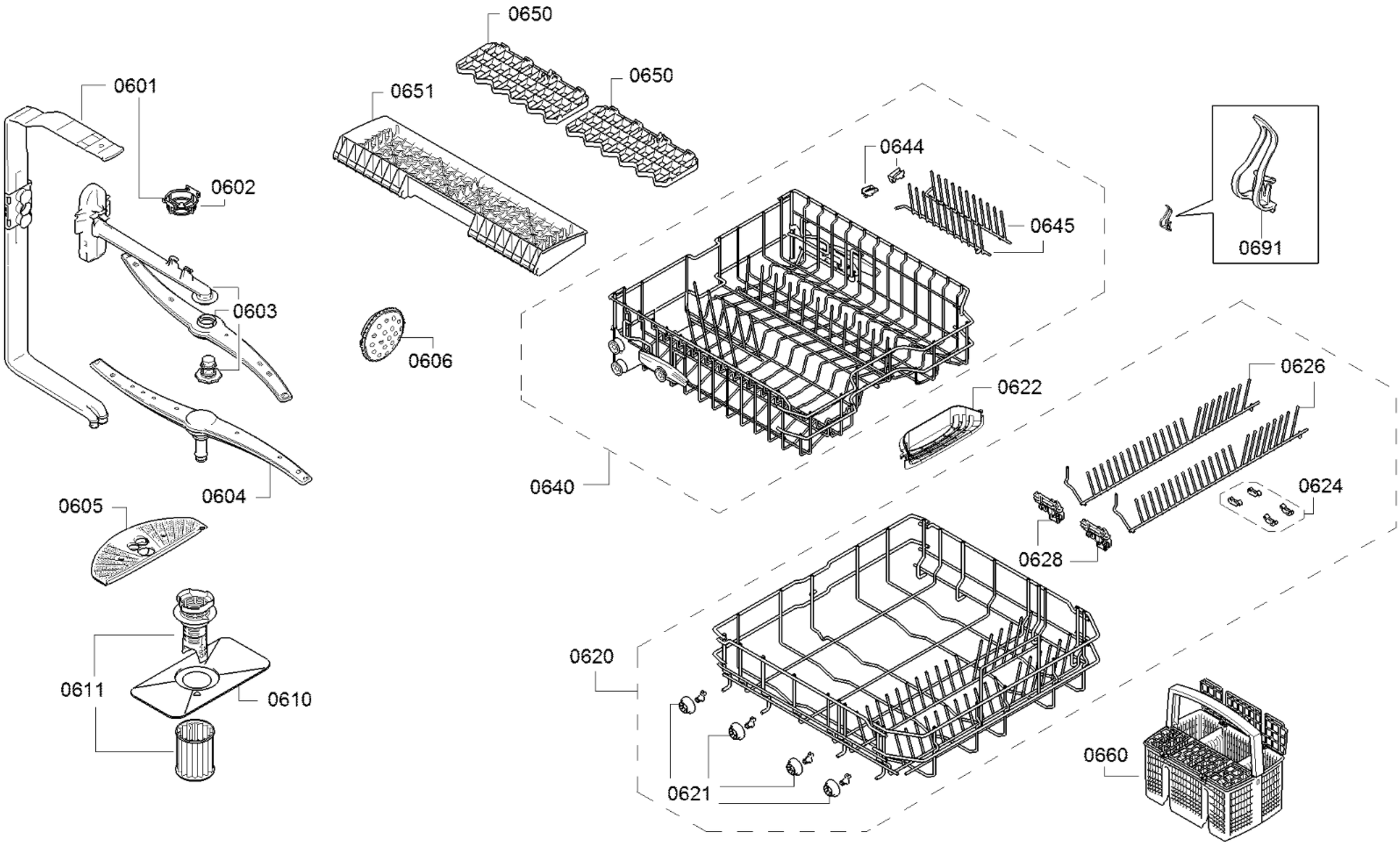


58300000182076 aet 000 b 6/6